Circuit-breakers NZM1, 2, 3, 4 up to 2000 A

Reliably and safely controlling, switching and managing power, in industry, in buildings and in machine construction. Enabled by innovative protection concepts coupled with diagnostic and communication functions.

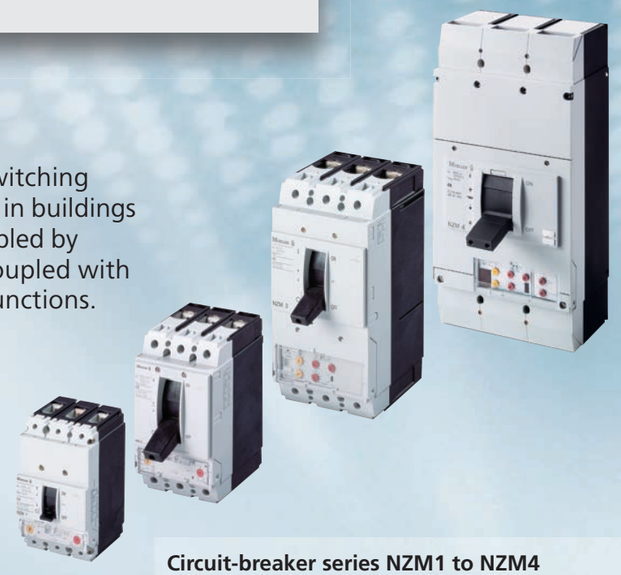

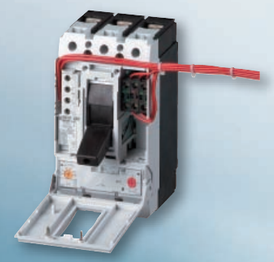

Circuit-breaker series NZM1 to NZM4

- just 4 compact frame sizes
- available as 3 and 4-pole device
- now also up to 2000 A
- flexible mounting using modular function groups
- full rated current at 50 °C ambient temperature
- switch suitable for world-wide use

Page 10/43

Standard/trip-indicating auxiliary contact from the Titan range

- reduced number of variants and stockholding requirement
- simple front installation at the same position
- simple clip-on feature saves mounting costs
- attractively priced identical parts from the control circuit device range

Page 10/68

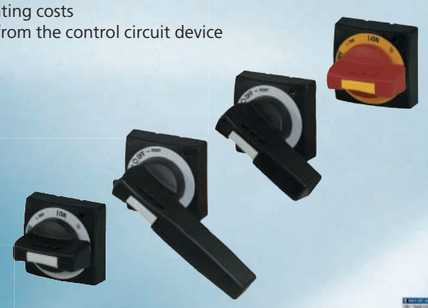

Door coupling rotary handles

- identical drilling template for all variants
- innovative automatic centring
- axis support for long-term reliable operation
- side-wall operation ensuring space-saving main switch installation

Page 10/80

Remote operators

- common functional concept of all variants
- low closing delays 60 ms to 100 ms
- locking and sealing features provide security

Page 10/94

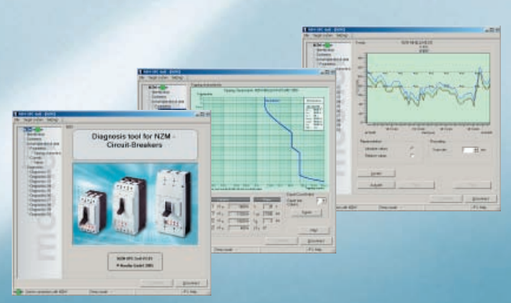

Diagnostics software NZM-XPC-SOFT

- diagnostics with a malfunction
- fault-free commissioning and documentation
- load analysis during operation

Part no. NZM-XPC-KIT,

page 10/96

Moeller HPL0211-2007/2008

Circuit-breakers, switch-disconnectors from 1.2 to 2000 A

	Page
System overview	
Circuit-breakers and switch-disconnectors, 3/4 pole	10/2
Technical overview	**10/4**
Ordering	
Circuit-breaker thermomagnetic release, 3-pole	10/6
Circuit-breakers, electronic releases, 3 pole	10/10
Circuit-breakers, electronic releases, 3 pole	10/12
Circuit-breaker thermomagnetic release, 4-pole	10/16
Circuit-breakers, electronic releases, 4 pole	10/20
Switch-disconnector, 3 pole	10/24
Switch-disconnector, 4 pole	10/25
Technical overview	
Circuit-breakers, switch-disconnectors for North America, 3/4 pole	10/26
Ordering	
Circuit-breaker UL/CSA, IEC, thermomagnetic release	10/28
circuit-breaker UL/CSA, IEC magnetic short-circuit release	10/32
Circuit-breaker UL/CSA, IEC, electronic release	10/36
Molded case switches for North America	10/42
Technical overview	
Circuit-breaker, switch-disconnector for 1000 V AC, 3-pole	10/43
Ordering	
Circuit-breaker for 1000 V, 3-pole	10/44
Connection by	10/46
Plug-in units	10/62
Withdrawable units	10/68
Auxiliary contact with screw terminals	10/70
Auxiliary switches with springloaded terminals	10/71
Undervoltage release with screw terminals	10/72
Undervoltage release, off-delayed	10/77
Shunt release with screw terminals	10/78
Door coupling rotary handles	10/82
Door coupling rotary handle for North America	10/84
Rotary handles	10/86
Rotary handles with door interlock	10/87
Main switch assembly kit	10/88
Accessories	10/90
Mechanical interlock	10/91
Mechanical interlock, paralleling mechanism	10/94
Multi-function device adapter	10/95
Accessories	10/96
Diagnostics, communication	10/98
Diagnostics, communication, insulated enclosures	10/99
Earth-fault release	10/102
Earth-fault release, residual current relay	10/103
Engineering	
Selectivity: incoming circuit-breaker, outgoing circuit-breaker	10/105
Line protection, backup protection	10/108
Direction of blow-out, minimum clearances, tube cable lugs	10/109
Auxiliary switches, trip-indicating auxiliary contacts	10/110
Mechanical interlock for (door-coupling) rotary handle	10/111
Mechanical interlock for remote operator, residual-current relay	10/112
Sizes 1, 2: tripping characteristics	10/113
Sizes 2, 3: tripping characteristics	10/114
Sizes 3, 4: tripping characteristics	10/115
Size 4: tripping characteristics	10/116
Size 1: let-through characteristics	10/117
Size 2: let-through characteristics	10/118
Sizes 1, 3: let-through characteristics	10/119
Sizes 2, 3: let-through characteristics	10/120
Frame size 2: residual-current release frequency response	10/121
Technical data	
Circuit-breaker, switch-disconnector	10/122
Circuit-breakers	10/124
Circuit-breaker, switch-disconnector for 1000 V AC, 3-pole	10/127
Switch-disconnector	10/128
Moulded Case Switch	10/129
Temperature dependency	10/130
Effective power loss	10/132
Conductor Cross-Sections	10/134
Auxiliary contact	10/136
Equipping with auxiliary contacts, time differences	10/137
Shunt release, undervoltage release	10/138
Remote operator, capacitor unit	10/139
Data Management Interface (DMI module)	10/140
Fieldbus connection	10/141
Residual current relay	10/142
Earth-fault release	10/144
Dimensions	
Size 1: base units	10/146
Size 1: accessories	10/147
Size 2: base units	10/155
Size 2: accessories	10/156
Size 3: base units	10/167
Size 3: accessories	10/168
Size 4: base units	10/177
Size 4: accessories	10/178
Circuit-breaker, switch-disconnector	10/183
Size 4: accessories	10/185

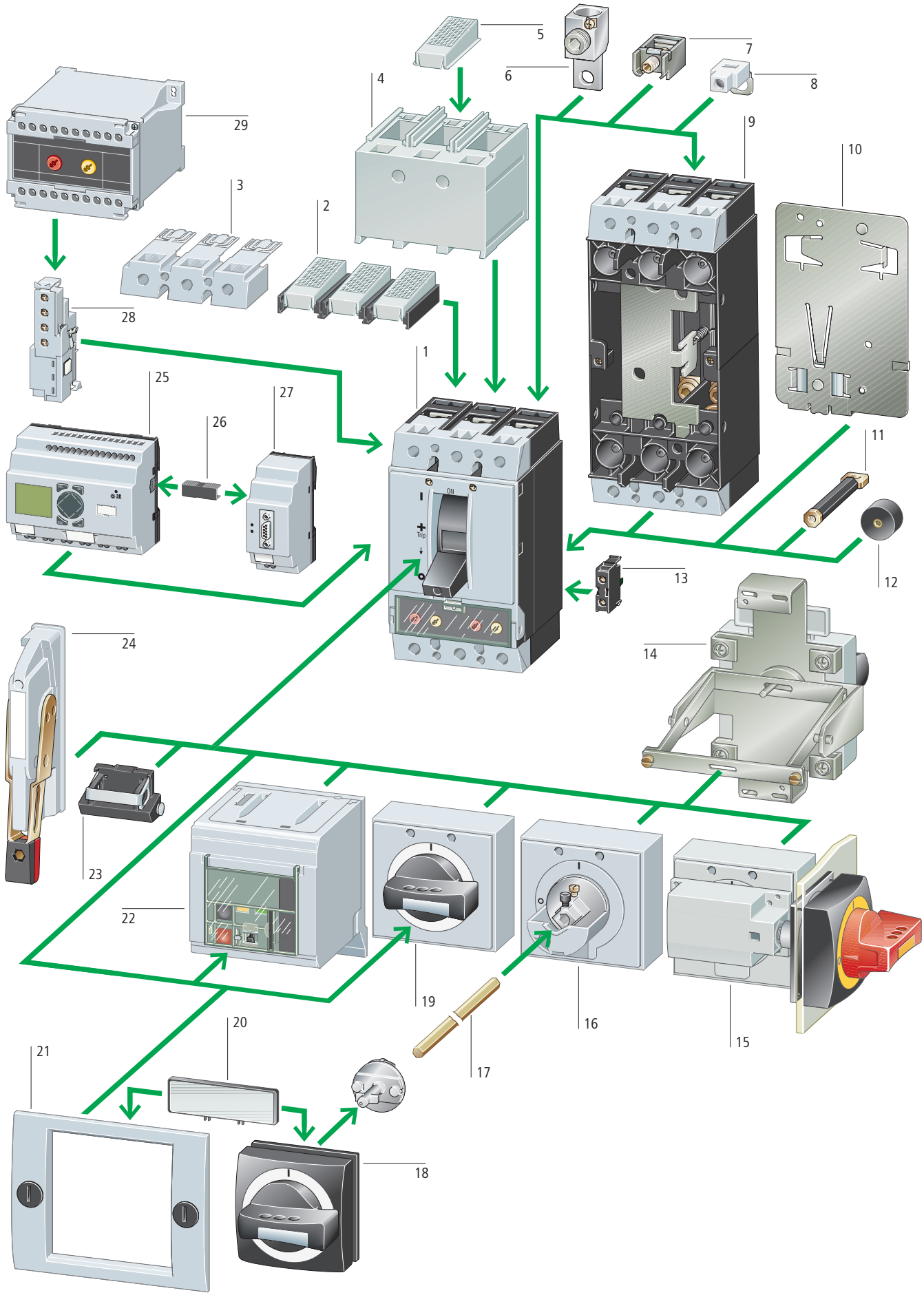
1
2
3
4
5
6
7
8
9
10
11
12
13
14
15
16
17
18
19
20
21
22
23
24
25
26
27
28
29

Basic units

Circuit-breaker 1
Rated uninterrupted current up to 2000 A
Switching capacity 25, 36, 50, 100, 150 kA at 415 V
Adjustable releases for overload and short-circuit
Adjustable time selectivity
Earth-fault protection
Protection of systems, cables, motors, generators
3 and 4 pole versions,IEC/EN 60947
→ page 10/6

Switch-disconnector 1
Rated uninterrupted current up to 1600 A
Remotely tripped switch-disconnector with undervoltage or shunt release
3 and 4 pole versions,IEC/EN 60947
→ page 10/24

Circuit-breakers for North America 1
Rated uninterrupted current up to 1200 A
Switching capacity 25, 35, 65, 100 kA at 480 V
Adjustable releases for overload and short-circuit
Adjustable time selectivity
Earth-fault protection
Protection of systems, cables, motors, generators
3 pole version, UL489/CSA22.2 No.5.1, IEC/EN 60947
→ page 10/28

Molded case switches for North America 1
Rated uninterrupted current up to 1200 A
Remotely tripped with undervoltage or shunt release
3 pole version, UL489/CSA22.2 No.5.1
→ page 10/42

Add-on functions

Standard auxiliary contact (HIN) 13
Switching with the main contacts. Used for indication and interlock functions.

Trip-indicating auxiliary contact (HIA) 13
General trip indication '+', when tripped by voltage release, overload release or short-circuit release

Early-make auxiliary contacts 28
For interlocking and load shedding circuits, as well as for early make of the undervoltage release in main switch/Emergency-stop applications
→ page 10/70

Voltage release 28
Undervoltage release
- Non-delayed
- OFF-delayed

Shunt release
→ page 10/72

Delay unit for undervoltage release 29
→ page 10/77

Rear drive 14
→ page 10/90

Door coupling rotary handle 16, 18
- Lockable
- With door interlock

→ page 10/82

Main switch rotary handle for side panel mounting 15
→ page 10/88

Extension shaft 17
Can be cut to required length.
→ page 10/82

Rotary handle 19
Lockable
→ page 10/86

Remote operator 22
For remote switching of circuit-breakers and switch-disconnectors
→ page 10/96

Toggle lever interlock device 23
→ page 10/92

Side operator handle 24
→ page 10/91

Data Management Interface (DMI module) 25
Access to diagnostics and operational data
Recording of current values
Motor starter function
Parameterization and control of the circuit-breakers with electronic releases
→ page 10/98

EASY-LINK-DS data plug 26
→ page 4/45

PROFIBUS-DP interface 27
→ page 10/98

Mounting accessories

Control circuit terminal 8
For two terminals at top or bottom
NZM1 → page 10/49
NZM2 → page 10/53
NZM3 → page 10/57
NZM4 → page 10/57

Tunnel terminals for Al and Cu cable 6
Standard with control circuit terminal
NZM1 → page 10/47
NZM2 → page 10/51
NZM3 → page 10/57
NZM4 → page 10/63

Box terminals 7
Standard version of frame size 1 assembled within the circuit-breaker enclosure
NZM1 → page 10/47
NZM2 → page 10/51
NZM3 → page 10/55

Terminal cover 4
Protection against direct contact wherecable lugs, busbars or tunnel terminals are used
NZM1 → page 10/49
NZM2 → page 10/53
NZM3 → page 10/58
NZM4 → page 10/67

Terminal cover, knockout 3
NZM1 → page 10/49
NZM2 → page 10/53
NZM3 → page 10/58
NZM4 → page 10/67

Clip plate 10
NZM1-XC35 a for 35 mm top-hat rail
NZM2-XC75 a for 75 mm top-hat rail
→ page 10/92

Rear connection 11
NZM1 → page 10/47
NZM2 → page 10/51
NZM3 → page 10/57
NZM4 → page 10/63

Plug-in and withdrawable unit 9
→ page 10/68

Insulating surround 21
For use with toggle lever, rotary drive and remote operator protruding from the enclosure
→ page 10/92

External warning plate/designation label 20
→ page 10/90

Spacer 12
→ page 10/92

IP2X protection against contact with a finger 2
For box terminals
NZM1 → page 10/49
NZM2 → page 10/53
NZM3 → page 10/58

IP2X protection against contact with a finger 5
For barrier
NZM1 → page 10/49
NZM2 → page 10/53
NZM3 → page 10/58

Circuit-breaker

With main switch characteristics to IEC/EN 60204 and isolating characteristics to IEC/EN 60947, VDE 0660

Rated uninterrupted current I_u = Rated current I_n / Adjustable overload release I_r / Adjustable short-circuit release I_i / Delayed short-circuit release I_{sd}	Thermomagnetic releases System and cable protection				Motor protection			
	I_u A	I_u A	I_r A	I_i A	I_u A	I_u A	I_r A	I_i A
Ambient temperature at 100% I_u min./max. -25 / +50 °C	20	20	0.8 – 1 × I_n	350		20	0.8 – 1 × I_n	350
	25	25				25		
	32	32				32		10 – 14 × I_n
	40	40		8 – 10 × I_n	40	40		8 – 14 × I_n
	50	50		6 – 10 × I_n	50	50		
	63	63			63	63		
	80	80			80	80		
	100	100			**100**	100		NZM1: 8 – 12.5 × I_n NZM2: 8 – 14 × I_n
	125	125				125		8 – 14 × I_n
	160	160		NZM1:8 × I_n 6 – 10 × I_n		160		
		200				**200**		
		250						

Basic switching capacity		NZMB1-A...		NZMB2-A...				NZMB1-M...		NZMB2-M...					
400/415 V	kA/cos φ	25	0.25	25	0.25			25	0.25	25	0.25				
440 V	kA/cos φ	25	0.25	25	0.25			25	0.25	25	0.25				
525 V	kA/cos φ	15	0.30	15	0.30			15	0.30	15	0.30				
Comfort witching capacity		**NZMC1-A...**		**NZMC2-A...**											
400/415 V	kA/cos φ	36	0.25	36	0.25										
440 V	kA/cos φ	30	0.25	30	0.25										
525 V	kA/cos φ	12	0.5	12	0.5										
690 V	kA/cos φ	8	0.5	8	0.5										
Normal switching capacity		**NZMN1-A...**		**NZMN2-A...**				**NZMN1-M...**		**NZMN2-M...**					
400/415 V	kA/cos φ	50	0.25	50	0.25			50	0.25	50	0.25				
440 V	kA/cos φ	35	0.25	35	0.25			35	0.25	35	0.25				
525 V	kA/cos φ	20	0.30	25	0.25			20	0.30	25	0.25				
690 V	kA/cos φ	10	0.50	20	0.30			10	0.50	20	0.30				
High switching capacity		**NZMH1-A-...**		**NZMH2-A-...**						**NZMH2-M...**					
400/415 V	kA/cos φ	100	0.20	150	0.20					150	0.20				
440 V	kA/cos φ	35	0.25	130	0.20					130	0.20				
525 V	kA/cos φ	20	0.30	50	0.25					50	0.25				
690 V	kA/cos φ	10	0.50	20	0.30					20	0.30				

Notes **The stated switching capacity values are rated ultimate short-circuit breaking capacities (I_{cu})**

Switch-disconnector

With main switch characteristics to IEC/EN 60204 and VDE 0113 isolating characteristics to IEC/EN 60947, VDE 0660 **without** overload and short-circuit release

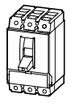
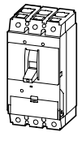
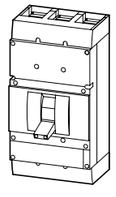

Rated uninterrupted current I_u = rated current I_n		63 – **160**		160 – **250**		400 – **630**		630 – **1600**
Type N can be triggered with U/A voltage release		**PN1-...**	**N1-...**	**PN2-...**	**N2-...**	**PN3-...**	**N3-...**	**N4-...**
Rated short-circuit making capacity I_{cm}	kA	2.8	2.8	5.5	5.5	25	25	53
Rated short-time withstand current I_{cw} (1s-I_{eff})	kA	2	2	3.5	3.5	12	12	25

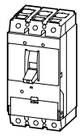
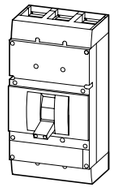

Electronic releases Systems, cable, selectivity and generator protection						Motor protection		
I_u A	I_u A	I_u A	I_r A	I_{sd} A	I_i A	I_u A	I_r A	I_i A
100	250	630	0.5 – 1 × I_n	2 – 10 × I_r	2 – 12 × I_n	90	0.5 – 1 × I_n	2 – 14 × I_r
160	400	800				140		
250	**630**	1000				220		
		1250				350		
		1600				450		
		2000		2 – 6 × I_r	2 – 8 × I_r	550		
						875		
						1400		

NZMN2-...E...		**NZMN3-...E...**		**NZMN4-...E...**						**NZMN2-ME...**		**NZMN3-ME...**		**NZMN4-ME...**	
50	0.25	50	0.25	50	0.25					50	0.25	50	0.25	50	0.25
35	0.25	35	0.25	35	0.25					35	0.25	35	0.25	35	0.25
25	0.25	25	0.25	25	0.25					25	0.25	25	0.25	25	0.25
20	0.30	20	0.30	20	0.30					20	0.30	20	0.30	20	0.30
NZMH2-...E...		**NZMH3-...E...**		**NZMH4-...E...**						**NZMH2-ME...**		**NZMH3-ME...**		**NZMH4-ME...**	
150	0.20	150	0.20	150	0.20					150	0.20	150	0.20	85	0.20
130	0.20	130	0.20	130	0.20					130	0.20	130	0.20	85	0.20
50	0.25	50	0.25	50	0.25					50	0.25	65	0.20	65	0.20
20	0.30	25	0.30	35	0.25					20	0.30	25	0.30	50	0.25

A selection of approved circuit-breakers and switch-disconnectors for world-wide use can be found from page 26

[1] Higher switching capacity on request

Rated current = rated uninterrupted current $I_n = I_u$ A	Setting range Overload releases I_r A	Short-circuit releases I_i A	Basic switching capacity **25 kA** at 415 V 50/60 Hz **Part no.** Article no.	**Price** see price list	Comfort switching capacity **36 kA** at 415 V 50/60 Hz **Part no.** Article no.	**Price** see price list
Protection of systems and cables						
3 pole						
Terminals standard, terminal screws as accessories						
20	15…20	350	**NZMB1-A20** 280987		**NZMC1-A20** 283293	
25	20…25	350	**NZMB1-A25** 280988		**NZMC1-A25** 283294	
32	25…32	350	**NZMB1-A32** 280989		**NZMC1-A32** 283295	
40	32…40	320…400	**NZMB1-A40** 259075		**NZMC1-A40** 271392	
50	40…50	300…500	**NZMB1-A50** 259076		**NZMC1-A50** 271393	
63	50…63	380…630	**NZMB1-A63** 259077		**NZMC1-A63** 271394	
80	63…80	480…800	**NZMB1-A80** 259078		**NZMC1-A80** 271395	
100	80…100	600…1000	**NZMB1-A100** 259079		**NZMC1-A100** 271396	
125	100…125	750…1250	**NZMB1-A125** 259080		**NZMC1-A125** 271397	
160	125…160	1280	**NZMB1-A160** 281230		**NZMC1-A160** 283296	
Terminal screws standard, terminals as accessories						
20	15…20	350				
25	20…25	350				
32	25…32	350				
40	32…40	320…400				
50	40…50	300…500				
63	50…63	380…630				
80	63…80	480…800				
100	80…100	600…1000				
125	100…125	750…1250				
160	125…160	960…1600	**NZMB2-A160** 259088		**NZMC2-A160** 271421	
200	160…200	1200…2000	**NZMB2-A200** 259089		**NZMC2-A200** 271422	
250	200…250	1500…2500	**NZMB2-A250** 259090		**NZMC2-A250** 271423	

Notes Notes for terminals → 10/47

Normal switching capacity **50 kA** at 415 V 50/60 Hz **Part no.** Article no.	**Price** see price list	High switching capacity **100 kA** [1]/**150 kA** [2] at 415 V 50/60 Hz **Part no.** Article no.	**Price** see price list	Std. pack	**Notes**
NZMN1-A20 281231		**NZMH1-A20** 284376		1 off	IEC/EN 60947-2 Adjustable overload releases I_r • 0.8 – 1 × I_n (ex-works 0.8 × I_n) Adjustable short-circuit releases I_i • 6 – 10 × I_n (ex-works 6 × I_n) – NZM...-A40: 8 – 10 × I_n (ex-works 8 × I_n) Fixed short-circuit release I_i • 350 A at I_n = 20 – 32 A • 1280 A at I_n = 160 A (NZM1) [1] valid for NZM1 [2] valid for NZM2
NZMN1-A25 281232		**NZMH1-A25** 284377			
NZMN1-A32 281233		**NZMH1-A32** 284378			
NZMN1-A40 259081		**NZMH1-A40** 284379			
NZMN1-A50 259082		**NZMH1-A50** 284410			
NZMN1-A63 259083		**NZMH1-A63** 284411			
NZMN1-A80 259084		**NZMH1-A80** 284412			
NZMN1-A100 259085		**NZMH1-A100** 284413			
NZMN1-A125 259086		**NZMH1-A125** 284414			
NZMN1-A160 281234		**NZMH1-A160** 284415			
		NZMH2-A20 281281		1 off	
		NZMH2-A25 281282			
		NZMH2-A32 281283			
		NZMH2-A40 259095			
		NZMH2-A50 259096			
		NZMH2-A63 259097			
		NZMH2-A80 259098			
		NZMH2-A100 259099			
		NZMH2-A125 259100			
NZMN2-A160 259092		**NZMH2-A160** 259101			
NZMN2-A200 259093		**NZMH2-A200** 259102			
NZMN2-A250 259094		**NZMH2-A250** 259103			

Rated current = rated uninterrupted current	Setting range		Motor rating AC-3 at 400 V 50/60 Hz	Rated operational current AC-3 at 400 V 50/60 Hz	Basic switching capacity **25 kA** at 415 V 50/60 Hz	
	Overload releases	Short-circuit releases			**Part no.** Article no.	**Price** see price list
$I_n = I_u$	I_r	I_i	P	I_e		
A	A	A	kW	A		
Motor protection						
3 pole						
Terminals standard, Terminal screws as accessories						
40	32…40	320…560	18.5	36	**NZMB1-M40** 265710	
50	40…50	400…700	22	41	**NZMB1-M50** 265711	
63	50…63	504…882	30	55	**NZMB1-M63** 265712	
80	63…80	640…1120	37	68	**NZMB1-M80** 265713	
100	80…100	800…1250	55	99	**NZMB1-M100** 265714	
Terminal screws standard, terminals as accessories						
20	16…20	350	7.5	16		
25	20…25	350	11	21.7		
32	25…32	320…448	15	29.3		
40	32…40	320…560	18.5	36		
50	40…50	400…700	22	41		
63	50…63	504…882	30	55		
80	63…80	640…1120	37	68		
100	80…100	800…1400	55	99		
125	100…125	1000…1750	55	99	**NZMB2-M125** 265715	
160	125…160	1280…2240	75	134	**NZMB2-M160** 265716	
200	160…200	1600…2800	110	196	**NZMB2-M200** 265717	

Notes Notes for terminals → 10/47

Normal switching capacity **50 kA** at 415 V 50/60 Hz		High switching capacity **150 kA** at 415 V 50/60 Hz		Std. pack	Notes
Part no. Article no.	**Price** see price list	**Part no.** Article no.	**Price** see price list		
NZMN1-M40 265718				1 off	IEC/EN 60947-4-1 and IEC/EN 60947-2
NZMN1-M50 265719					The circuit-breaker fulfills all requirements for AC-3 switching category.
NZMN1-M63 265720					Adjustable overload releases I_r • 0.8 – 1 × I_n (ex-works 0.8 × I_n) – NZM…1-M…: with single phasing sensitivity – Tripping class 10 A
NZMN1-M80 265721					
NZMN1-M100 265722					Adjustable short-circuit releases I_i • 8 – 14 × I_n (ex-works 12 × I_n) – NZMH2-M32: 10 – 14 × I_n (ex-works 12 × I_n) – NZM...1-M100: 8 – 12.5 × I_n (ex-works 12 × I_n)
		NZMH2-M20 281299		1 off	Fixed short-circuit release I_i • 350 A at I_n = 20 – 25 A
		NZMH2-M25 281300			
		NZMH2-M32 281301			
		NZMH2-M40 281302			
		NZMH2-M50 281303			
		NZMH2-M63 281304			
		NZMH2-M80 281305			
		NZMH2-M100 281306			
NZMN2-M125 265723		**NZMH2-M125** 281307			
NZMN2-M160 265724		**NZMH2-M160** 281308			
NZMN2-M200 265725		**NZMH2-M200** 281309			

Tripping class	Tripping time T_p with load on all poles of 7.2 times current setting value
10 A	2 s < T_p ≦ 10 s
10	4 s < T_p ≦ 10 s
20	6 s < T_p ≦ 20 s
30	9 s < T_p ≦ 30 s

Rated current = rated uninterrupted current	Setting range: Overload releases	Short-circuit releases: Non-delayed	Short-circuit releases: Delayed short-circuit release	Normal switching capacity **50 kA** at 415 V 50/60 Hz: **Part no.** Article no.	**Price** see price list
$I_n = I_u$	I_r	I_i	I_{sd}		
A	A	A	A		
Protection of systems and cables					
3 pole					
Terminal screws standard, terminals as accessories					
250	125…250	500…2750		**NZMN3-AE250** 259113	
400	200…400	800…4400		**NZMN3-AE400** 259114	
630	315…630	1260…5040		**NZMN3-AE630** 259115	
630	315…630	1260…7560		**NZMN4-AE630** 265758	
800	400…800	1600…9600		**NZMN4-AE800** 265759	
1000	500…1000	2000…12000		**NZMN4-AE1000** 265760	
1250	630…1250	2500…15000		**NZMN4-AE1250** 265761	
1600	800…1600	3200…19200		**NZMN4-AE1600** 265762	
Systems and cable protection, selectivity and generator protection					
3 pole					
Terminal screws standard, terminals as accessories					
100	50…100	1200	100…1000	**NZMN2-VE100** 259122	
160	80…160	1920	160…1600	**NZMN2-VE160** 259123	
250	125…250	3000	250…2500	**NZMN2-VE250** 259124	
250	125…250	500…2750	250…2500	**NZMN3-VE250** 259131	
400	200…400	800…4400	400…4000	**NZMN3-VE400** 259132	
630	315…630	1260…5040	472…4410	**NZMN3-VE630** 259133	
630	315…630	1260…7560	630…6300	**NZMN4-VE630** 265768	
800	400…800	1600…9600	800…8000	**NZMN4-VE800** 265769	
1000	500…1000	2000…12000	1000…10000	**NZMN4-VE1000** 265770	
1250	630…1250	2500…15000	1250…12500	**NZMN4-VE1250** 265771	
1600	800…1600	3200…19200	1600…16000	**NZMN4-VE1600** 265772	
2000	1000…2000	4000…16000	2000…12000	**NZMN4-VE2000**[2) 3)] 107274	

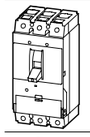
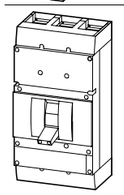
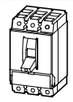
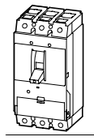
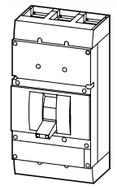
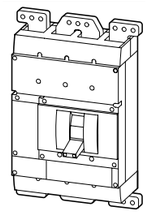

Notes Notes for terminals → 10/55
1) High switching capacity for NZMH4-VE…: 85 kA; please enquire for higher switching capacities.
2) please enquire.
3) cannot be used as withdrawable.

High switching capacity **150 kA**[1)] at 415 V 50/60 Hz: **Part no.** Article no.	**Price** see price list	Std. pack	**Notes**
NZMH3-AE250 259116		1 off	IEC/EN 60947-2 Adjustable overload releases I_r • 0.5 – 1 × I_n (ex-works 0.8 × I_n) R.m.s. value measurement and "thermal memory" Adjustable short-circuit releases I_i • NZM...3-AE250/400: 2 – 11 × I_n (ex-works 6 × I_n) • NZM...3-AE630: 2 – 8 × I_n (ex-works 6 × I_n) • NZM...4-AE...: 2 – 12 × I_n (ex-works 6 × I_n)
NZMH3-AE400 259117			
NZMH3-AE630 259118			
NZMH4-AE630 265763			
NZMH4-AE800 265764			
NZMH4-AE1000 265765			
NZMH4-AE1250 265766			
NZMH4-AE1600 265767			
NZMH2-VE100 259125		1 off	IEC/EN 60947-2 Adjustable overload releases I_r • 0.5 – 1 × I_n (ex-works 0.8 × I_n) R.m.s. value measurement and "thermal memory" Adjustable time delay setting to overcome current peaks t_r • 2 … 20 s with 6 × I_r as well as infinity (without overload release) (ex-factory 10 s) – NZM…4-VE2000: 2 … 10 s at 6 × I_r also infinity (ex-works 10 s) Adjustable delayed short-circuit releases I_{sd} • 2 – 10 × I_r (ex-works 6 × I_r) – NZM…3-VE630: 1.5 – 7 × I_r (ex-works 6 × I_r) – NZM…4-VE2000: 2 – 6 × I_r (ex-works 6 × I_r) Adjustable delay time t_{sd} • Steps: 0, 20, 60, 100, 200, 300, 500, 750, 1000 ms (ex-works 0 ms) Adjustable non-delayed short-circuit releases I_i • NZM2 fixed 12 × I_n • NZM…3-VE250/400: 2 – 11 × I_n (ex-works 6 × I_n) • NZM…3-VE630: 2 – 8 × I_n (ex-works 6 × I_n) • NZM…4-VE…: 2 – 12 × I_n (ex-works 12 × I_n) • NZM…4-VE2000: 2 – 8× I_n (ex-works 8 × I_n) i^2t constant function • NZM2 fixed OFF • NZM3, NZM4 switched (ex-works OFF)
NZMH2-VE160 259126			
NZMH2-VE250 259127			
NZMH3-VE250 259134			
NZMH3-VE400 259135			
NZMH3-VE630 259136			
NZMH4-VE630 265773			
NZMH4-VE800 265774			
NZMH4-VE1000 265775			
NZMH4-VE1250 265776			
NZMH4-VE1600 265777			
NZMH4-VE2000[2) 3)] 101400			

	Rated current = rated uninterrupted current	Setting range Short-circuit releases	Motor rating AC-3 at 400 V 50/60 Hz	Rated operational current AC-3 at 400 V 50/60 Hz	Basic switching capacity **25 kA** at 415 V 50/60 Hz		Normal switching capacity **50 kA** at 415 V 50/60 Hz	
					Part no. Article no.	**Price** see price list	**Part no.** Article no.	**Price** see price list
	$I_n = I_u$	I_i	P	I_e				
	A	A	kW	A				
Short-circuit protection								
Motor protection in conjunction with overload relay • With short-circuit release • Without overload release								
3 pole								
Terminals standard, terminal screws as accessories								
	40	320…560	18.5	36	**NZMB1-S40** 265726		**NZMN1-S40** 265731	
	50	400…700	22	41	**NZMB1-S50** 265727		**NZMN1-S50** 265732	
	63	504…882	30	55	**NZMB1-S63** 265728		**NZMN1-S63** 265733	
	80	640…1120	37	68	**NZMB1-S80** 265729		**NZMN1-S80** 265734	
	100	800…1250	55	99	**NZMB1-S100** 265730		**NZMN1-S100** 265735	
Terminal screws standard, terminals as accessories								
	40	320…560	18.5	36				
	50	400…700	22	41				
	63	504…882	30	55				
	80	640…1120	37	68				
	100	800…1400	55	99				
	125	1000…1750	55	99	**NZMB2-S125** 265736		**NZMN2-S125** 265739	
	160	1280…2240	75	134	**NZMB2-S160** 265737		**NZMN2-S160** 265740	
	200	1600…2500	110	196	**NZMB2-S200** 265738		**NZMN2-S200** 265741	

Notes Notes for terminals → 10/47

High switching capacity **100 kA** at 415 V 50/60 Hz				Std. pack	**Notes**
Part no. Article no.	**Price** see price list	**Part no.** Article no.	**Price** see price list		
NZMH1-S40 284436				1 off	IEC/EN 60947-4-1 and IEC/EN 60947-2 The circuit-breaker fulfills all requirements for AC-3 switching category. Adjustable short-circuit releases I_i • 8 – 14 × I_n (ex-works 12 × I_n) – NZM...1-S100, NZM...2-S200: 8 – 12.5 × I_n (ex-works 12 × I_n) Without overload release I_r **Selection** of circuit-breakers without overload release when combining with ZEV electronic motor-protective relay: The tripping response of the ZEV motor-protective relay is matched by setting of the tripping class (CLASS), to the starting behaviour of the motor to be protected.
NZMH1-S50 284437					
NZMH1-S63 284438					
NZMH1-S80 284439					
NZMH1-S100 284440					
NZMH2-S40 265742		**NZML2-S40** 265750		1 off	
NZMH2-S50 265743		**NZML2-S50** 265751			
NZMH2-S63 265744		**NZML2-S63** 265752			
NZMH2-S80 265745		**NZML2-S80** 265753			
NZMH2-S100 265746		**NZML2-S100** 265754			
NZMH2-S125 265747		**NZML2-S125** 265755			
NZMH2-S160 265748		**NZML2-S160** 265756			
NZMH2-S200 265749		**NZML2-S200** 265757			

	I_n in A	**Maximum permissible tripping class CLASS**
NZM...1-S...	40	30
	50	30
	63	30
	80	20
	100	15
NZM...2-S...	40	30
	50	30
	63	30
	80	30
	100	30
	125	30
	160	20
	200	10

Tripping class	**Tripping time T_p with load on all poles of 7.2 times current setting value**
10 A	2 s < T_p ≦ 10 s
10	4 s < T_p ≦ 10 s
20	6 s < T_p ≦ 20 s
30	9 s < T_p ≦ 30 s

Motor-starter combination of classification types 1 and 2 can be found in the "Fuseless motor-starter combinations" section.

	Rated current = rated uninterrupted current	Setting range Overload releases	Short-circuit releases	Motor rating AC-3 at 400 V 50/60 Hz	Rated operational current AC-3 at 400 V 50/60 Hz	Normal switching capacity **50 kA** at 415 V 50/60 Hz **Part no.** Article no.	**Price** see price list
	$I_n = I_u$	I_r	I_i	P	I_e		
	A	A	A	kW	A		
Motor protection							
3 pole							
Terminal screws standard, terminals as accessories							
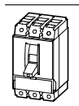	90	45…90	90…1260	45	81	**NZMN2-ME90** 265778	
	140	70…140	140…1960	75	134	**NZMN2-ME140** 265779	
	220	110…220	220…3080	110	196	**NZMN2-ME220** 265780	
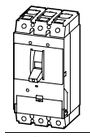	220	110…220	220…3080	110	196	**NZMN3-ME220** 265781	
	350	175…350	350…4900	200	349	**NZMN3-ME350** 265782	
	450	225…450	450…6300	250	437	**NZMN3-ME450** 284468	
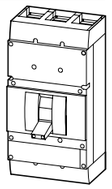	550	275…550	550…7700	315[1]	544[1]	**NZMN4-ME550** 265783	
	875	438…875	875…12250	500[1]	820[1]	**NZMN4-ME875** 265784	
	1400	700…1400	1400…19600	630[1]	1066[1]	**NZMN4-ME1400** 265785	

High switching capacity[2] **150 kA** at 415 V 50/60 Hz **Part no.** Article no.	**Price** see price list	Std. pack	**Notes**
NZMH2-ME90 265786		1 off	IEC/EN 60947-2 and IEC/EN 60947-4-1
NZMH2-ME140 265787			The circuit-breaker fulfills all requirements for AC-3 switching category.
NZMH2-ME220 265788			Adjustable overload releases I_r • 0.5 – 1 × I_n (ex-works 0.8 × I_n)
NZMH3-ME220 265789			R.m.s. value measurement and "thermal memory"
NZMH3-ME350 265790			Adjustable time delay setting to overcome current peaks t_r • 2 … 20 s with 6 × I_r as well as infinity (without overload release) (ex-factory 10 s)
NZMH3-ME450 284469			Phase-failure sensitivity
NZMH4-ME550 265791			Adjustable short-circuit releases I_i • 2 – 14 × I_r (ex-works 12 × I_r)
NZMH4-ME875 265792			
NZMH4-ME1400 265793			

Notes Notes for terminals → 10/51

1).

At 690 V AC NZM...4-ME550: P = 560 kW; I_e = 550 A
NZM...4-ME875: P = 600 kW; I_e = 588 A
NZM...4-ME1400: P = 600 kW; I_e = 588 A

2) High switching capacity for NZMH4-ME...: 85 kA

http://catalog.moeller.net Moeller HPL0211-2007/2008 NZM…2, NZM…3, NZM…4 xEnergy

Circuit-breakers, switch-disconnectors, IEC

Rated current = rated uninterrupted current	Setting range			Basic switching capacity **25 kA** at 415 V 50/60 Hz		Normal switching capacity **50 kA** at 415 V 50/60 Hz	
				Part no. Article no.	**Price** see price list	**Part no.** Article no.	**Price** see price list
$I_n = I_u$	Overload releases		Short-circuit releases				
A	Main pole	Neutral conductor					
	I_r	I_r	I_i				
	A	A	A				
Protection of systems and cables							
4 pole							
Terminals standard, terminal screws as accessories							
20	15…20	15…20	350	**NZMB1-4-A20** 281237		**NZMN1-4-A20** 281245	
25	20…25	20…25	350	**NZMB1-4-A25** 281239		**NZMN1-4-A25** 281247	
32	25…32	25…32	350	**NZMB1-4-A32** 281241		**NZMN1-4-A32** 281249	
40	32…40	32…40	320…400	**NZMB1-4-A40** 265799		**NZMN1-4-A40** 265811	
50	40…50	40…50	300…500	**NZMB1-4-A50** 265801		**NZMN1-4-A50** 265813	
63	50…63	50…63	380…630	**NZMB1-4-A63** 265803		**NZMN1-4-A63** 265815	
80	63…80	63…80	480…800	**NZMB1-4-A80** 265805		**NZMN1-4-A80** 265817	
100	80…100	80…100	600…1000	**NZMB1-4-A100** 265807		**NZMN1-4-A100** 265819	
125	100…125	100…125	750…1250	**NZMB1-4-A125** 265809		**NZMN1-4-A125** 265821	
160	125…160	125…160	1280	**NZMB1-4-A160** 281243		**NZMN1-4-A160** 281251	

Notes Notes for terminals → 10/47

High switching capacity **100 kA** at 415 V 50/60 Hz			
Part no. Article no.	**Price** see price list	Std. pack	**Notes**
NZMH1-4-A20 284416		1 off	IEC/EN 60947-2 Adjustable overload releases I_r • 0.8 – 1 × I_n (ex-works 0.8 × I_n) Setting on neutral pole implemented via the main pole setting I_r of the main pole. Adjustable short-circuit releases I_i • 6 – 10 × I_n (ex-works 6 × I_n) – NZM…1-4-A40: 8 – 10 × I_n (ex-works 8 × I_n) Fixed short-circuit release I_i • 350 A at I_n = 20 – 32 A • 1280 A at I_n = 160 A (8 × I_n) NZM..1-4-A… • With 100 % overload and short-circuit protection in 4th pole
NZMH1-4-A25 284418			
NZMH1-4-A32 284420			
NZMH1-4-A40 284422			
NZMH1-4-A50 284424			
NZMH1-4-A63 284426			
NZMH1-4-A80 284428			
NZMH1-4-A100 284430			
NZMH1-4-A125 284432			
NZMH1-4-A160 284434			

Rated current = rated uninterrupted current	Setting range Overload releases		Short-circuit releases	Basic switching capacity **25 kA** at 415 V 50/60 Hz		Normal switching capacity **50 kA** at 415 V 50/60 Hz	
	Main pole	Neutral conductor		**Part no.** Article no.	**Price** see price list	**Part no.** Article no.	**Price** see price list
$I_n = I_u$	I_r	I_r	I_i				
A	A	A	A				
Protection of systems and cables							
4 pole							
Terminal screws standard, terminals as accessories							
20	15…20	15…20	350				
25	20…25	20…25	350				
32	25…32	25…32	350				
40	32…40	32…40	320…400				
50	40…50	40…50	300…500				
63	50…63	50…63	380…630				
80	63…80	63…80	480…800				
100	80…100	80…100	600…1000				
125	100…125	100…125	750…1250				
160	125…160	125…160	960…1600	**NZMB2-4-A160** 265849		**NZMN2-4-A160** 265860	
160	125…160	80…100	960…1600	**NZMB2-4-A160/100** 265850		**NZMN2-4-A160/100** 265861	
200	160…200	160…200	1200…2000	**NZMB2-4-A200** 265852		**NZMN2-4-A200** 265863	
200	160…200	100…125	1200…2000	**NZMB2-4-A200/125** 265853		**NZMN2-4-A200/125** 265864	
250	200…250	200…250	1500…2500	**NZMB2-4-A250** 265855		**NZMN2-4-A250** 265866	
250	200…250	125…160	1500…2500	**NZMB2-4-A250/160** 265856		**NZMN2-4-A250/160** 265867	

Notes Notes for terminals → 10/51

High switching capacity **150 kA** at 415 V 50/60 Hz		Std. pack	**Notes**
Part no. Article no.	**Price** see price list		
NZMH2-4-A20 281287		1 off	IEC/EN 60947-2 Adjustable overload releases I_r • 0.8 – 1 × I_n (ex-works 0.8 × I_n) Setting on neutral pole implemented via the main pole setting I_r of the main pole. Adjustable short-circuit releases I_i • 6 – 10 × I_n (ex-works 6 × I_n) Fixed short-circuit release I_i • 350 A at I_n = 20 – 32 A NZM..2-4-A… • With 100 % overload and short-circuit protection in 4th pole NZM..2-4-A…/60 • With 60 % overload and short-circuit protection in 4th pole
NZMH2-4-A25 281289			
NZMH2-4-A32 281291			
NZMH2-4-A40 265823			
NZMH2-4-A50 265825			
NZMH2-4-A63 265827			
NZMH2-4-A80 265829			
NZMH2-4-A100 265831			
NZMH2-4-A125 265833			
NZMH2-4-A160 265871			
NZMH2-4-A160/100 265872			
NZMH2-4-A200 265874			
NZMH2-4-A200/125 265875			
NZMH2-4-A250 265877			
NZMH2-4-A250/160 265878			

Rated current = rated uninterrupted current	Setting range: Overload releases, Main pole	Setting range: Overload releases, Neutral conductor	Setting range: Short-circuit releases	Normal switching capacity **50 kA** at 415 V 50/60 Hz: **Part no.** Article no.	**Price** see price list
$I_n = I_u$	I_r	I_r	I_i		
A	A	A	A		
Protection of systems and cables					
4 pole					
Terminal screws standard, terminals as accessories					
400	200…400	200…400	800…4400	**NZMN3-4-AE400** 265891	
400	200…400	125…250	800…4400	**NZMN3-4-AE400/250** 265892	
630	315…630	315…630	1260…5040	**NZMN3-4-AE630** 265894	
630	315…630	200…400	1260…5040	**NZMN3-4-AE630/400** 265895	
800	400…800	400…800	1600…9600	**NZMN4-4-AE800** 265909	
800	400…800	250…500	1600…9600	**NZMN4-4-AE800/500** 265910	
1000	500…1000	500…1000	2000…12000	**NZMN4-4-AE1000** 265912	
1000	500…1000	315…630	2000…12000	**NZMN4-4-AE1000/630** 265913	
1250	630…1250	630…1250	2500…15000	**NZMN4-4-AE1250** 265915	
1250	630…1250	400…800	2500…15000	**NZMN4-4-AE1250/800** 265916	
1600	800…1600	800…1600	3200…19200	**NZMN4-4-AE1600** 265918	
1600	800…1600	500…1000	3200…19200	**NZMN4-4-AE1600/1000** 265919	

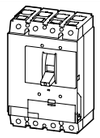

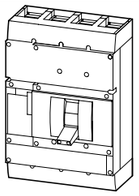

Notes Notes for terminals → 10/55

High switching capacity **150 kA** at 415 V 50/60 Hz: **Part no.** Article no.	**Price** see price list	Std. pack	**Notes**
NZMH3-4-AE400 265897		1 off	IEC/EN 60947-2 Adjustable overload releases I_r • 0.5 – 1 × I_n (ex-works 0.8 × I_n) Setting on neutral pole implemented via the main pole setting I_r of the main pole. R.m.s. value measurement and "thermal memory" Adjustable short-circuit releases I_i • NZM...3-4-AE400: 2 – 11 × I_n (ex-works 6 × I_n) • NZM...3-4-AE630: 2 – 8 × I_n (ex-works 6 × I_n) • NZM...4-4-AE...: 2 – 12 × I_n (ex-works 6 × I_n) NZM...-4-AE... • With 100 % overload and short-circuit protection in 4th pole NZM...-4-AE.../... • With 60 % overload and short-circuit protection in 4th pole Higher switching capacity for NZMH4-4-AE...: 100 kA
NZMH3-4-AE400/250 265898			
NZMH3-4-AE630 265900			
NZMH3-4-AE630/400 265901			
NZMH4-4-AE800 265921			
NZMH4-4-AE800/500 265922			
NZMH4-4-AE1000 265924			
NZMH4-4-AE1000/630 265925			
NZMH4-4-AE1250 265927			
NZMH4-4-AE1250/800 265928			
NZMH4-4-AE1600 265930			
NZMH4-4-AE1600/1000 265931			

	Rated current = rated uninterrupted current	Setting range Overload releases Main pole	Setting range Overload releases Neutral conductor	Short-circuit releases Non-delayed	Short-circuit releases Delayed short-circuit release	Normal switching capacity **50 kA** at 415 V 50/60 Hz **Part no.** Article no.	**Price** see price list
	$I_n = I_u$ A	I_r A	I_r A	I_i A	I_{sd} A		
Systems and cable protection, selectivity and generator protection							
4 pole							
Terminal screws standard, terminals as accessories							
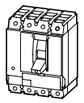	100	50…100	50…100	1200	100…1000	**NZMN2-4-VE100** 265933	
	160	80…160	80…160	1920	160…1600	**NZMN2-4-VE160** 265935	
	160	80…160	50…100	1920	160…1600	**NZMN2-4-VE160/100** 265936	
	250	125…250	125…250	3000	250…2500	**NZMN2-4-VE250** 265938	
	250	125…250	80…160	3000	250…2500	**NZMN2-4-VE250/160** 265939	
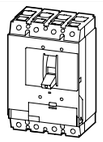	400	200…400	200…400	800…4400	400…4000	**NZMN3-4-VE400** 265957	
	400	200…400	125…250	800…4400	400…4000	**NZMN3-4-VE400/250** 265958	
	630	315…630	315…630	1260…5040	472…4410	**NZMN3-4-VE630** 265960	
	630	315…630	200…400	1260…5040	472…4410	**NZMN3-4-VE630/400** 265961	
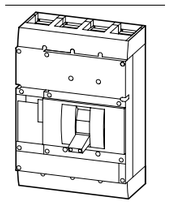	800	400…800	400…800	1600…9600	800…8000	**NZMN4-4-VE800** 265975	
	800	400…800	250…500	1600…9600	800…8000	**NZMN4-4-VE800/500** 265976	
	1000	500…1000	500…1000	2000…12000	1000…10000	**NZMN4-4-VE1000** 265978	
	1000	500…1000	315…630	2000…12000	1000…10000	**NZMN4-4-VE1000/630** 265979	
	1250	630…1250	630…1250	2500…15000	1250…12500	**NZMN4-4-VE1250** 265981	
	1250	630…1250	400…800	2500…15000	1250…12500	**NZMN4-4-VE1250/800** 265982	
	1600	800…1600	800…1600	3200…19200	1600…16000	**NZMN4-4-VE1600** 265984	
	1600	800…1600	500…1000	3200…19200	1600…16000	**NZMN4-4-VE1600/1000** 265985	

Notes Notes for terminals → 10/51

High switching capacity[1] **150 kA** at 415 V 50/60 Hz **Part no.** Article no.	**Price** see price list	Std. pack	**Notes**
NZMH2-4-VE100 265941		1 off	IEC/EN 60947-2 Adjustable overload releases I_r • 0.5 – 1 × I_n (ex-works 0.8 × I_n) Setting on neutral pole implemented via the main pole setting I_r of the main pole. R.m.s. value measurement and "thermal memory" Adjustable time delay setting to overcome current peaks t_r • 2 … 20 s with 6 × I_r as well as infinity (without overload release) (ex-factory 10 s) – NZM...3-4-VE630: 2 – 14 s at 6 × I_r also infinity (without overload release) Adjustable delayed short-circuit releases I_{sd} • 2 – 10 × I_r (ex-works 6 × I_r) – NZM...3-4-VE630: 1.5 – 7 × I_r (ex-works 6 × I_r) Adjustable delay time t_{sd} • Steps: 0, 20, 60, 100, 200, 300, 500, 750, 1000 ms (ex-works 0 ms) Adjustable non-delayed short-circuit releases I_i • NZM2 fixed 12 × I_n • NZM...3-4-VE400: 2 – 11 × I_n (ex-works 6 × I_n) • NZM...3-4-VE630: 2 – 8 × I_n (ex-works 6 × I_n) • NZM...4-4-VE...: 2 – 12 × I_n (ex-works 12 × I_n) i^2t constant function (ex-works OFF) • NZM2 fixed OFF • NZM3, NZM4 switched (ex-works OFF) NZM...-4-VE... • With 100 % overload and short-circuit protection in 4th pole NZM...-4-VE.../... • With 60 % overload and short-circuit protection in 4th pole [1] High switching capacity for NZMH4-4-VE...: 100 kA
NZMH2-4-VE160 265943			
NZMH2-4-VE160/100 265944			
NZMH2-4-VE250 265946			
NZMH2-4-VE250/160 265947			
NZMH3-4-VE400 265963			
NZMH3-4-VE400/250 265964			
NZMH3-4-VE630 265966			
NZMH3-4-VE630/400 265967			
NZMH4-4-VE800 265987			
NZMH4-4-VE800/500 265988			
NZMH4-4-VE1000 265990			
NZMH4-4-VE1000/630 265991			
NZMH4-4-VE1250 265993			
NZMH4-4-VE1250/800 265994			
NZMH4-4-VE1600 265996			
NZMH4-4-VE1600/1000 265997			

	Rated current = rated uninterrupted current $I_n = I_u$ A	Short-circuit protection max. fuse gL-characteristic A gL	2 switch positions I, 0. Cannot be remotely operated. **Part no.** Article no.	**Price** see price list	3 switch positions I, +, 0; can be tripped remotely with shunt/undervoltage release **Part no.** Article no.	**Price** see price list	Std. pack
Switch-disconnectors							
3 pole							
Terminals standard, terminal screws as accessories							
	63	125	**PN1-63** 259140		**N1-63** 259143		1 off
	100	125	**PN1-100** 259141		**N1-100** 259144		
	125	125	**PN1-125** 259142		**N1-125** 259145		
	160	160	**PN1-160** 281235		**N1-160** 281236		
Terminal screws standard, terminals as accessories							
	160	250	**PN2-160** 266005		**N2-160** 266008		1 off
	200	250	**PN2-200** 266006		**N2-200** 266009		
	250	250	**PN2-250** 266007		**N2-250** 266010		
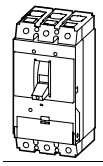	400	630	**PN3-400** 266017		**N3-400** 266019		
	630	630	**PN3-630** 266018		**N3-630** 266020		
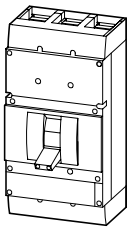	630	1600			**N4-630** 107273		
	800	1600			**N4-800** 266025		
	1000	1600			**N4-1000** 266026		
	1250	1600			**N4-1250** 266027		
	1600	1600			**N4-1600** 266028		

Notes

Main switch characteristics including positive drive to IEC/EN 60204 and VDE 0113
Isolating characteristics to IEC/EN 60947-3 and VDE 0660
Protection against accidental contact according to IEC 100
With the switch-disconnector N additional voltage releases NZM...-XU, NZM...-XA and trip-indicating auxiliary contacts (HIA) can be used.

N2..., N3... and N4... can also be combined with the NZM...-XR... remote operator.

Notes for terminals → 10/47

	Rated current = rated uninterrupted current $I_n = I_u$ A	Short-circuit protection max. fuse gL-characteristic A gL	2 switch positions I, 0. Cannot be remotely operated. **Part no.** Article no.	**Price** see price list	3 switch positions I, +, 0; can be tripped remotely with shunt/undervoltage release **Part no.** Article no.	**Price** see price list	Std. pack
Switch-disconnectors							
4 pole							
Terminals standard, terminal screws as accessories							
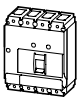	63	125	**PN1-4-63** 265999		**N1-4-63** 266002		1 off
	100	125	**PN1-4-100** 266000		**N1-4-100** 266003		
	125	125	**PN1-4-125** 266001		**N1-4-125** 266004		
	160	160	**PN1-4-160** 281253		**N1-4-160** 281254		
Terminal screws standard, terminals as accessories							
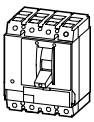	160	250	**PN2-4-160** 266011		**N2-4-160** 266014		
	200	250	**PN2-4-200** 266012		**N2-4-200** 266015		
	250	250	**PN2-4-250** 266013		**N2-4-250** 266016		
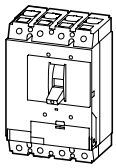	400	630	**PN3-4-400** 266021		**N3-4-400** 266023		
	630	630	**PN3-4-630** 266022		**N3-4-630** 266024		
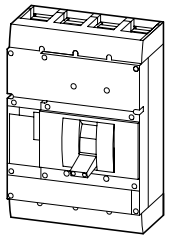	800	1600			**N4-4-800** 266029		
	1000	1600			**N4-4-1000** 266030		
	1250	1600			**N4-4-1250** 266031		
	1600	1600			**N4-4-1600** 266032		

Notes

Main switch characteristics including positive drive to IEC/EN 60204 and VDE 0113
Isolating characteristics to IEC/EN 60947-3 and VDE 0660
Protection against accidental contact according to IEC 100
With the switch-disconnector N additional voltage releases NZM...-XU, NZM...-XA and trip-indicating auxiliary contacts (HIA) can be used.

N2..., N3... and N4... can also be combined with the NZM...-XR... remote operator.

Notes for terminals → 10/47

Circuit-breaker

UL/CSA approved to UL 489, CSA 22.2 No. 5.1 as well as IEC/EN 60947

With main switch characteristics to IEC/EN 60204 and isolating characteristics to IEC/EN 60947, VDE 0660

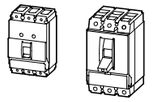

Rated uninterrupted current I_u =
Rated current I_n
Adjustable overload release I_r
Adjustable short-circuit release I_i
Delayed short-circuit release I_{sd}

	Thermomagnetic releases						
	Overload releases						
	Fixed		Adjustable			Without	
	I_u		I_u		I_r	I_u	
	A		A		A	A	
	NZM1	NZM2	NZM1	NZM2		NZM1	NZM2
	15 – **125**	15 – **250**	20 – **125**	20 – **250**	0.8 – 1 × I_n	1.2 – **100**	1.6 – **250**
Basic switching capacity[1]	**NZMB1-...-NA**	**NZMB2-...-NA**					
NEMA Test Procedure 240 V 60 Hz sym. rms kA	35	35					
480 V 60 Hz sym. rms kA	25[2]	25					
600 V 60 Hz sym. rms kA	–	18					
IEC/EN 60947 400/415 V kA/cos φ	25 0.25	25 0.25					
440 V kA/cos φ	25 0.25	25 0.25					
525 V kA/cos φ	15 0.30	15 0.30					
Normal switching capacity[1]	**NZMN1-...-NA**	**NZMN2-...-NA**					
NEMA Test Procedure 240 V 60 Hz sym. rms kA	85	85					
480 V 60 Hz sym. rms kA	35[2]	35					
600 V 60 Hz sym. rms kA	–	25					
IEC/EN 60947 400/415 V kA/cos φ	50 0.25	50 0.25					
440 V kA/cos φ	35 0.25	35 0.25					
525 V kA/cos φ	20 0.30	25 0.25					
690 V kA/cos φ	10 0.50	20 0.30					
High switching capacity[1]		**NZMH2-...-NA**					
NEMA Test Procedure 240 V 60 Hz sym. rms kA		150					
480 V 60 Hz sym. rms kA		100					
600 V 60 Hz sym. rms kA		50					
IEC/EN 60947 400/415 V kA/cos φ		150 0.20					
440 V kA/cos φ		130 0.20					
525 V kA/cos φ		50 0.25					
690 V kA/cos φ		20 0.30					

Notes
[1] Switches correspond with both UL/CSA as well as IEC regulations
IEC switching performance values contained on type label → Technical data
[2] With NZM...1-...-NA > 50 A 480Y/277V

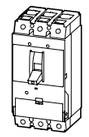
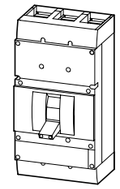

	Electronic releases																	
	Overload releases												Short-circuit releases					
	Fixed	Adjustable		Withou	Fixed	Adjustable		Withou	Fixed	Adjustable		System protection		Motor
	I_u	I_u	I_r	I_u	I_u	I_u	I_r	I_u	I_u	I_u	I_r	I_{sd}	I_i	I_i
	A	A	A	A	A	A	A	A	A	A	A	A	A	A
	150 – **250**	100 – **250**	0.5 – 1 × I_n	90 – **220**	250 – **600**	250 – **600**	0.5 – 1 × I_n	220 – **450**	600 – **1200**	800 – **1200**	0.5 – 1 × I_n	2 – 10 × I_r	2 – 12 × I_n	2 – 14 × I_n
Basic switching capacity[1]														
NEMA Test Procedure 240 V 60 Hz sym. rms kA														
480 V 60 Hz sym. rms kA														
600 V 60 Hz sym. rms kA														
IEC/EN 60947 400/415 V kA/cos φ														
440 V kA/cos φ														
525 V kA/cos φ														
690 V kA/cos φ														
Normal switching capacity[1]	**NZMN2-...E...-NA**				**NZMN3-...E...-NA**				**NZMN4-...E...-NA**					
NEMA Test Procedure 240 V 60 Hz sym. rms kA	85				85				85					
480 V 60 Hz sym. rms kA	35				42				42					
600 V 60 Hz sym. rms kA	25				35				35					
IEC/EN 60947 400/415 V kA/cos φ	50	0.25			50	0.25			50	0.25				
440 V kA/cos φ	35	0.25			35	0.25			35	0.25				
525 V kA/cos φ	25	0.25			25	0.25			25	0.25				
690 V kA/cos φ	20	0.30			20	0.30			20	0.30				
High switching capacity[1]	**NZMH2-...E...-NA**				**NZMH3-...E...-NA**				**NZMH4-...E...-NA**					
NEMA Test Procedure 240 V 60 Hz sym. rms kA	150				150				125					
480 V 60 Hz sym. rms kA	100				100				85					
600 V 60 Hz sym. rms kA	50				50				50					
IEC/EN 60947 400/415 V kA/cos φ	150	0.20			150	0.20			85[1]	0.20				
440 V kA/cos φ	130	0.20			130	0.20			85	0.20				
525 V kA/cos φ	50	0.25			65	0.25			65	0.25				
690 V kA/cos φ	20	0.30			35	0.25			50	0.25				

The approved switches are suitable for world-wide use. The UL and CSA certificates can be found at www.ul.com and www.csa.com
UL certificate: File No.: E 31593 (NZM1-4), E 148671 (N(S)1-4)
CSA certificate: File No. 165628 (NZM1-4)
[1] Higher switching capacity on request

Molded case switch
UL/CSA approved to UL 489, CSA 22.2 No. 5.1 as well as IEC/EN 60947-2 annex L

With main switch characteristics to IEC/EN 60204 and VDE 0113
isolating characteristics to IEC/EN 60947
without overcurrent
With short-circuit release
Rated uninterrupted current $I_u = I_n$

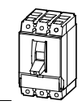
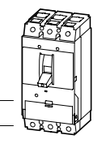
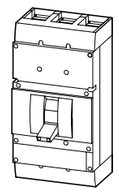

		63	160	400	800
		100	200	**600**	1000
		125	**250**		**1200**
Switching capacity		**NS1-...-NA**	**NS2-...-NA**	**NS3-...-NA**	**NS4-...-NA**
according to UL 489, CSA 22.2	240 V	85	150	150	85
	480 V	35	100	100	65
	600 V	–	50	50	42
IEC/EN 60947	400/415 V	50	150	150	70
	440 V	35	130	130	65
	525 V	20	50	65	40
	690	10	20	35	35

	Rated current = rated uninterrupted current $I_n = I_u$ A	Setting range Overload releases I_r A	Setting range Short-circuit releases I_i A	Basic switching capacity 35 kA 240 V 60 Hz 1) 25 kA 480 V 60 Hz 2) 18 kA 600 V 60 Hz 2) Part no. Article no.	Price see price list	Normal switching capacity 85 kA 240 V 60 Hz 1) 35 kA 480 V 60 Hz 2) 25 kA 600 V 60 Hz 2) Part no. Article no.	Price see price list
Protection of systems and cables 3 pole							
Fixed overload releases Terminals standard, terminal screws as accessories	15	15	350	**NZMB1-AF15-NA** 281553		**NZMN1-AF15-NA** 281564	
	20	20	350	**NZMB1-AF20-NA** 281554		**NZMN1-AF20-NA** 281565	
	25	25	350	**NZMB1-AF25-NA** 281555		**NZMN1-AF25-NA** 281566	
	30	30	350	**NZMB1-AF30-NA** 281556		**NZMN1-AF30-NA** 281567	
	35	35	320…400	**NZMB1-AF35-NA** 272204		**NZMN1-AF35-NA** 274220	
	40	40	320…400	**NZMB1-AF40-NA** 272205		**NZMN1-AF40-NA** 274223	
	45	45	300…500	**NZMB1-AF45-NA** 272206		**NZMN1-AF45-NA** 274230	
	50	50	300…500	**NZMB1-AF50-NA** 272207		**NZMN1-AF50-NA** 274231	
	60	60	380…630	**NZMB1-AF60-NA** 272208		**NZMN1-AF60-NA** 274232	
	70	70	480…800	**NZMB1-AF70-NA** 272209		**NZMN1-AF70-NA** 274233	
	80	80	480…800	**NZMB1-AF80-NA** 272250		**NZMN1-AF80-NA** 274234	
	90	90	600…1000	**NZMB1-AF90-NA** 272251		**NZMN1-AF90-NA** 274235	
	100	100	600…1000	**NZMB1-AF100-NA** 272252		**NZMN1-AF100-NA** 274236	
	110	110	750…1250	**NZMB1-AF110-NA** 281557		**NZMN1-AF110-NA** 281568	
	125	125	750…1250	**NZMB1-AF125-NA** 281558		**NZMN1-AF125-NA** 281569	
Terminal screws standard, terminals as accessories 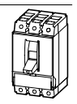	15	15	350	**NZMB2-AF15-NA** 269142		**NZMN2-AF15-NA** 269170	
	20	20	350	**NZMB2-AF20-NA** 269143		**NZMN2-AF20-NA** 269171	
	25	25	350	**NZMB2-AF25-NA** 269144		**NZMN2-AF25-NA** 269172	
	30	30	350	**NZMB2-AF30-NA** 269145		**NZMN2-AF30-NA** 269173	
	35	35	320…400	**NZMB2-AF35-NA** 269146		**NZMN2-AF35-NA** 269174	
	40	40	320…400	**NZMB2-AF40-NA** 269147		**NZMN2-AF40-NA** 269175	
	45	45	300…500	**NZMB2-AF45-NA** 269148		**NZMN2-AF45-NA** 269176	
	50	50	300…500	**NZMB2-AF50-NA** 269149		**NZMN2-AF50-NA** 269177	
	60	60	380…630	**NZMB2-AF60-NA** 269160		**NZMN2-AF60-NA** 269178	
	70	70	480…800	**NZMB2-AF70-NA** 269161		**NZMN2-AF70-NA** 269179	
	80	80	480…800	**NZMB2-AF80-NA** 269162		**NZMN2-AF80-NA** 269180	
	90	90	600…1000	**NZMB2-AF90-NA** 269163		**NZMN2-AF90-NA** 269181	
	100	100	600…1000	**NZMB2-AF100-NA** 269164		**NZMN2-AF100-NA** 269182	
	110	110	750…1250	**NZMB2-AF110-NA** 269165		**NZMN2-AF110-NA** 269183	

Notes Notes for terminals → 10/47

High switching capacity 150 kA 240 V 60 Hz 100 kA 480 V 60 Hz 50 kA 600 V 60 Hz Part no. Article no.	Price see price list	Std. pack	Notes
		1 off	Switches conform to UL/CSA as well as the IEC regulations. IEC switching performance values are contained on the rating plate. UL 489, CSA-C22.2-5.1, IEC/EN 60947-2 Fixed overload releases I_r Adjustable short-circuit releases I_i • ca. 6 – 10 × I_n (ex-works 6 × I_n) – NZM...-AF35/40-NA: approx. 8 – 10 × I_n Fixed short-circuit releases I_i • 350 A at I_n = 15 – 30 A 1) Basic switching capacity 25 kA 480 V and normal switching capacity 35 kA 480 V for NZM…1-…-NA: 480 Y/277 V AC from 60 A.
NZMH2-AF15-NA 269188		1 off	Switches conform to UL/CSA as well as the IEC regulations. IEC switching performance values are contained on the rating plate. UL 489, CSA-C22.2-5.1, IEC/EN 60947-2 Fixed overload releases I_r Adjustable short-circuit releases I_i • ca. 6 – 10 × I_n (ex-works 6 × I_n) – NZM...-AF35/40-NA: approx. 8 – 10 × I_n Fixed short-circuit releases I_i • 350 A at I_n = 15 – 30 A 2) Basic switching capacity 18 kA 600 V and Normal switching capacity 25 kA 600 V for NZM2.
NZMH2-AF20-NA 269189			
NZMH2-AF25-NA 269190			
NZMH2-AF30-NA 269191			
NZMH2-AF35-NA 269192			
NZMH2-AF40-NA 269193			
NZMH2-AF45-NA 269194			
NZMH2-AF50-NA 269195			
NZMH2-AF60-NA 269196			
NZMH2-AF70-NA 269197			
NZMH2-AF80-NA 269198			
NZMH2-AF90-NA 269199			
NZMH2-AF100-NA 269200			
NZMH2-AF110-NA 269201			

Rated current = rated uninterrupted current $I_n = I_u$ A	Setting range Overload releases I_r A	Short-circuit releases I_i A	Basic switching capacity 35 kA 240 V 60 Hz 25 kA 480 V 60 Hz 1) 18 kA 600 V 60 Hz 2) Part no. Article no.	Price see price list	Normal switching capacity 85 kA 240 V 60 Hz 35 kA 480 V 60 Hz 1) 25 kA 600 V 60 Hz 2) Part no. Article no.	Price see price list
Protection of systems and cables						
3 pole						
Fixed overload releases Terminal screws standard, terminals as accessories						
125	125	750…1250	**NZMB2-AF125-NA** 269166		**NZMN2-AF125-NA** 269184	
150	150	960…1600	**NZMB2-AF150-NA** 269167		**NZMN2-AF150-NA** 269185	
175	175	1200…2000	**NZMB2-AF175-NA** 269168		**NZMN2-AF175-NA** 269186	
200	200	1200…2000	**NZMB2-AF200-NA** 269169		**NZMN2-AF200-NA** 269187	
225	225	1500…2500	**NZMB2-AF225-NA** 271089		**NZMN2-AF225-NA** 271101	
250	250	1500…2500	**NZMB2-AF250-NA** 271100		**NZMN2-AF250-NA** 271102	
Adjustable overload releases Terminals standard, terminal screws as accessories						
20	15…20	350	**NZMB1-A20-NA** 281559		**NZMN1-A20-NA** 281570	
25	20…25	350	**NZMB1-A25-NA** 281560		**NZMN1-A25-NA** 281571	
32	25…32	350	**NZMB1-A32-NA** 281561		**NZMN1-A32-NA** 281572	
40	32…40	320…400	**NZMB1-A40-NA** 272253		**NZMN1-A40-NA** 274237	
50	40…50	300…500	**NZMB1-A50-NA** 272254		**NZMN1-A50-NA** 274239	
63	50…63	380…630	**NZMB1-A63-NA** 272255		**NZMN1-A63-NA** 274240	
80	63…80	480…800	**NZMB1-A80-NA** 272256		**NZMN1-A80-NA** 274241	
100	80…100	600…1000	**NZMB1-A100-NA** 272258		**NZMN1-A100-NA** 274242	
125	100…125	750…1250	**NZMB1-A125-NA** 281562		**NZMN1-A125-NA** 281573	
Adjustable overload releases Terminal screws standard, terminals as accessories						
20	15…20	350	**NZMB2-A20-NA** 269206		**NZMN2-A20-NA** 269217	
25	20…25	350	**NZMB2-A25-NA** 269207		**NZMN2-A25-NA** 269218	
32	25…32	350	**NZMB2-A32-NA** 269208		**NZMN2-A32-NA** 269219	
40	32…40	320…400	**NZMB2-A40-NA** 269209		**NZMN2-A40-NA** 269220	
50	40…50	300…500	**NZMB2-A50-NA** 269210		**NZMN2-A50-NA** 269221	
63	50…63	380…630	**NZMB2-A63-NA** 269211		**NZMN2-A63-NA** 269222	
80	63…80	480…800	**NZMB2-A80-NA** 269212		**NZMN2-A80-NA** 269223	
100	80…100	600…1000	**NZMB2-A100-NA** 269213		**NZMN2-A100-NA** 269224	
125	100…125	750…1250	**NZMB2-A125-NA** 269214		**NZMN2-A125-NA** 269225	
160	125…160	960…1600	**NZMB2-A160-NA** 269215		**NZMN2-A160-NA** 269226	
200	160…200	1200…2000	**NZMB2-A200-NA** 269216		**NZMN2-A200-NA** 269227	
250	200…250	1500…2500	**NZMB2-A250-NA** 271105		**NZMN2-A250-NA** 271106	

Notes

High switching capacity 150 kA 240 V 60 Hz 100 kA 480 V 60 Hz 50 kA 600 V 60 Hz Part no. Article no.	Price see price list	Std. pack	Notes
NZMH2-AF125-NA 269202		1 off	Switches conform to UL/CSA as well as the IEC regulations. IEC switching performance values are contained on the rating plate. UL 489, CSA-C22.2-5.1, IEC/EN 60947-2 Fixed overload releases I_r Adjustable short-circuit releases I_i • ca. 6 – 10 × I_n (ex-works 6 × I_n) – NZM...-AF35/40-NA: approx. 8 – 10 × I_n Fixed short-circuit releases I_i • 350 A at I_n = 15 – 30 A 2) **Basic switching capacity 18 kA 600 V and Normal switching capacity 25 kA 600 V for NZM2.**
NZMH2-AF150-NA 269203			
NZMH2-AF175-NA 269204			
NZMH2-AF200-NA 269205			
NZMH2-AF225-NA 271103			
NZMH2-AF250-NA 271104			
		1 off	Switches conform to UL/CSA as well as the IEC regulations. IEC switching performance values are contained on the rating plate. UL 489, CSA-C22.2-5.1, IEC/EN 60947-2 Adjustable overload releases I_r • 0.8 – 1 × I_n (ex-works 0.8 × I_n) Adjustable short-circuit releases I_i • 6 – 10 × I_n (ex-works 6 × I_n) – NZM...-A40-NA: 8 – 10 × I_n Fixed short-circuit releases I_i • 350 A at I_n = 20 – 32 A 1) **Basic switching capacity 25 kA 480 V and normal switching capacity 35 kA 480 V for NZM…1-…-NA: 480 Y/277 V AC from 60 A.**
NZMH2-A20-NA 269228		1 off	Switches conform to UL/CSA as well as the IEC regulations. IEC switching performance values are contained on the rating plate. UL 489, CSA-C22.2-5.1, IEC/EN 60947-2 Adjustable overload releases I_r • 0.8 – 1 × I_n (ex-works 0.8 × I_n) Adjustable short-circuit releases I_i • 6 – 10 × I_n (ex-works 6 × I_n) – NZM...-A40-NA: 8 – 10 × I_n Fixed short-circuit releases I_i • 350 A at I_n = 20 – 32 A 2) **Basic switching capacity 18 kA 600 V and normal switching capacity 25 kA 600 V for NZM2.**
NZMH2-A25-NA 269229			
NZMH2-A32-NA 269230			
NZMH2-A40-NA 269231			
NZMH2-A50-NA 269232			
NZMH2-A63-NA 269233			
NZMH2-A80-NA 269234			
NZMH2-A100-NA 269235			
NZMH2-A125-NA 269236			
NZMH2-A160-NA 269237			
NZMH2-A200-NA 269238			
NZMH2-A250-NA 271107			

	Rated current = rated uninterrupted current	Setting range Short-circuit releases	Basic switching capacity 240 V 60 Hz 480 V 60 Hz 1) Part no. Article no.	Price see price list	Normal switching capacity 240 V 60 Hz 480 V 60 Hz 1) Part no. Article no.	Price see price list	Std. pack
	$I_n = I_u$	I_i					
	A	A $I>$					
Short-circuit protection **Motor protection in conjunction with contactor and overload relay** • with short-circuit release • without overload release							
3 pole							
Terminals standard, terminal screws as accessories							
	1.2	8…14	**NZMB1-S1,2-CNA** 102906		**NZMN1-S1,2-CNA** 103025		1 off
	2	12.8…22.4	**NZMB1-S2-CNA** 102907		**NZMN1-S2-CNA** 103026		
	3	19.2…33.6	**NZMB1-S3-CNA** 102908		**NZMN1-S3-CNA** 103027		
	5	32…56	**NZMB1-S5-CNA** 102909		**NZMN1-S5-CNA** 103028		
	8	48…84	**NZMB1-S8-CNA** 103020		**NZMN1-S8-CNA** 103029		
	12	80…140	**NZMB1-S12-CNA** 103021		**NZMN1-S12-CNA** 103030		
	18	128…224	**NZMB1-S18-CNA** 103022		**NZMN1-S18-CNA** 103031		
	26	200…350	**NZMB1-S26-CNA** 103023		**NZMN1-S26-CNA** 103032		
	33	256…448	**NZMB1-S33-CNA** 103024		**NZMN1-S33-CNA** 103033		
	40	320…560	**NZMB1-S40-CNA** 281263		**NZMN1-S40-CNA** 281276		
	50	400…700	**NZMB1-S50-CNA** 281264		**NZMN1-S50-CNA** 281277		
	63	504…882	**NZMB1-S63-CNA** 281265		**NZMN1-S63-CNA** 281278		
	80	640…1120	**NZMB1-S80-CNA** 281266		**NZMN1-S80-CNA** 281279		
	100	800…1250	**NZMB1-S100-CNA** 281267		**NZMN1-S100-CNA** 281280		

Notes Notes for terminals → 10/47

Notes

Switches conform to UL/CSA as well as the IEC regulations.
IEC switching performance values from 40 A are contained on the rating plate.
UL 489, CSA-C22.2-5.1, IEC/EN 60947-4-1

Adjustable short-circuit releases I_i
- 8 – 14 × I_n (ex-works 12 × I_n)
  - NZM...1-S1,2...33-CNA: approx. 8 – 14 × I_n
  - NZM...1-S100-CNA: 8 – 12.5 × I_n (ex-works 12 × I_n)

Without overload release I_r

CNA: The device has components approved to UL, the conditions of approval must be observed during use.
I.e. the device must be combined with a suitable contactor and overload relay.
A switching capacity is stated for the complete motor-starter combination.
The device is approved as a CSA approved single device.

1) Basic switching capacity and Normal switching capacity: 480Y/277 V AC from 60 A.

Rated current = rated uninterrupted current $I_n = I_u$ A	Setting range Short-circuit releases I_i A	Basic switching capacity 240 V 60 Hz 480 V 60 Hz 600 V 60 Hz Part no. Article no.	Price see price list	Normal switching capacity 240 V 60 Hz 480 V 60 Hz 600 V 60 Hz Part no. Article no.	Price see price list
Short-circuit protection Motor protection in conjunction with contactor and overload relay • With short-circuit release • Without overload release 3 pole					
Terminal screws standard, terminals as accessories					
1.6	12.8…22.4	**NZMB2-S1,6-CNA** 269472		**NZMN2-S1,6-CNA** 269478	
2.4	19.2…33.6	**NZMB2-S2,4-CNA** 269473		**NZMN2-S2,4-CNA** 269479	
5	32…56	**NZMB2-S5-CNA** 103034		**NZMN2-S5-CNA** 103040	
8	48…84	**NZMB2-S8-CNA** 103035		**NZMN2-S8-CNA** 103041	
12	80…140	**NZMB2-S12-CNA** 103036		**NZMN2-S12-CNA** 103042	
18	128…224	**NZMB2-S18-CNA** 103037		**NZMN2-S18-CNA** 103043	
26	200…350	**NZMB2-S26-CNA** 103038		**NZMN2-S26-CNA** 103044	
33	256…448	**NZMB2-S33-CNA** 103039		**NZMN2-S33-CNA** 103045	
40	320…560	**NZMB2-S40-CNA** 269243		**NZMN2-S40-CNA** 269255	
50	400…700	**NZMB2-S50-CNA** 269244		**NZMN2-S50-CNA** 269256	
63	504…882	**NZMB2-S63-CNA** 269245		**NZMN2-S63-CNA** 269257	
80	640…1120	**NZMB2-S80-CNA** 269246		**NZMN2-S80-CNA** 269258	
100	800…1400	**NZMB2-S100-CNA** 269247		**NZMN2-S100-CNA** 269259	
125	1000…1750	**NZMB2-S125-CNA** 269248		**NZMN2-S125-CNA** 269260	
160	1280…2240	**NZMB2-S160-CNA** 269249		**NZMN2-S160-CNA** 269261	
200	1600…2500	**NZMB2-S200-CNA** 269250		**NZMN2-S200-CNA** 269262	
250	2000…2500	**NZMB2-S250-CNA** 102478		**NZMN2-S250-CNA** 102479	

Notes Notes for terminals → 10/51

Std. pack	Notes
1 off	Switches conform to UL/CSA as well as the IEC regulations. IEC switching performance values from 40 A are contained on the rating plate. UL 489, CSA-C22.2-5.1, IEC/EN 60947-4-1 • NZM...2-S250-CNA: IEC/EN 60947-2 Adjustable short-circuit releases I_i • 8 – 14 × I_n (ex-works 12 × I_n) – NZM...2-S4...33-CNA: 8 – 10 × I_n (ex-works 10 × I_n) – NZM...2-S250-CNA: 8 – 10 × I_n (ex-works 10 × I_n) Without overload release I_r CNA: The device has components approved to UL, the conditions of approval must be observed during use. I.e. the device must be combined with a suitable contactor and overload relay. A switching capacity is stated for the complete motor-starter combination. The device is approved as a CSA approved single device.

	Rated current = rated uninterrupted current $I_n = I_u$ A	Setting range Overload releases I_r A	Short-circuit releases Non-delayed I_i A	Normal switching capacity 85 kA 240 V 60 Hz 42 kA 480 V 60 Hz 35 kA 600 V 60 Hz Part no. Article no.	Price see price list	High switching capacity 125 kA 240 V 60 Hz 100 kA 480 V 60 Hz [1] 50 kA 600 V 60 Hz Part no. Article no.	Price see price list	Std. pack	Notes
Protection of systems and cables									
3 pole									
Fixed overload releases Terminal screws standard, terminals as accessories									
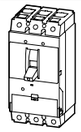	250	250	500…2750	**NZMN3-AEF250-NA** 269275		**NZMH3-AEF250-NA** 269283		1 off	Switches conform to UL/CSA as well as the IEC regulations. IEC switching performance values are contained on the rating plate. UL 489, CSA-C22.2-5.1, IEC/EN 60947-2 Fixed overload releases I_r R.m.s. value measurement and "thermal memory" Adjustable short-circuit releases I_i • With NZM...3-AEF250...400-NA: 2 – 11 × I_n (ex-works 6 × I_n) • With NZM...3-AEF450...600-NA: 2 – 8 × I_n (ex-works 6 × I_n) • With NZM...4-AEF...-NA: 2 – 12× I_n (ex-works 6 × I_n) [1] **High switching capacity for NZMH4: 85 kA/480 V**
	300	300	600…3300	**NZMN3-AEF300-NA** 269276		**NZMH3-AEF300-NA** 269284			
	350	350	700…3850	**NZMN3-AEF350-NA** 269277		**NZMH3-AEF350-NA** 269285			
	400	400	800…4400	**NZMN3-AEF400-NA** 269278		**NZMH3-AEF400-NA** 269286			
	450	450	900…3600	**NZMN3-AEF450-NA** 269279		**NZMH3-AEF450-NA** 269287			
	500	500	1000…4000	**NZMN3-AEF500-NA** 269280		**NZMH3-AEF500-NA** 269288			
	550	550	1100…4400	**NZMN3-AEF550-NA** 269281		**NZMH3-AEF550-NA** 269289			
	600	600	1200…4800	**NZMN3-AEF600-NA** 269282		**NZMH3-AEF600-NA** 269290			
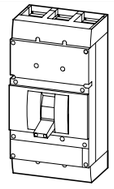	600	600	1200…7200	**NZMN4-AEF600-NA** 271108		**NZMH4-AEF600-NA** 271114			
	700	700	1400…8400	**NZMN4-AEF700-NA** 271109		**NZMH4-AEF700-NA** 271115			
	800	800	1600…9600	**NZMN4-AEF800-NA** 271110		**NZMH4-AEF800-NA** 271116			
	900	900	1800…10800	**NZMN4-AEF900-NA** 271111		**NZMH4-AEF900-NA** 271117			
	1000	1000	2000…12000	**NZMN4-AEF1000-NA** 271112		**NZMH4-AEF1000-NA** 271118			
	1200	1200	2400…14400	**NZMN4-AEF1200-NA** 271113		**NZMH4-AEF1200-NA** 271119			
3 pole									
Adjustable overload releases Terminal screws standard, terminals as accessories									
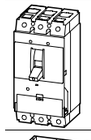	250	125…250	500…2750	**NZMN3-AE250-NA** 269299		**NZMH3-AE250-NA** 269302		1 off	Switches conform to UL/CSA as well as the IEC regulations. IEC switching performance values are contained on the rating plate. UL 489, calibration to UL 508, CSA-C22.2-5.1, IEC/EN 60947-2 Use in motor control circuits only in conjunction with a suitable contactor. Motor protection characteristic to UL 508 for NZM4 on request. Adjustable overload releases I_r • 0.5 – 1 × I_n (ex-factory 0.8 × I_n) R.m.s. value measurement and "thermal memory" Adjustable short-circuit releases I_i • With NZM...3-AE250/400-NA: 2 – 11 × I_n (ex-works 6 × I_n) • With NZM...3-AE600-NA: 2 – 8 × I_n (ex-works 6 × I_n) • With NZM...4-AE...-NA: 2 – 12 × I_n (ex-works 6 × I_n) High switching capacity for NZMH4: 85 kA/480 V
	400	200…400	800…4400	**NZMN3-AE400-NA** 269300		**NZMH3-AE400-NA** 269303			
	600	300…600	1200…4800	**NZMN3-AE600-NA** 269301		**NZMH3-AE600-NA** 269304			
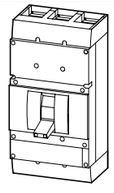	800	400…800	1600…9600	**NZMN4-AE800-NA** 271120		**NZMH4-AE800-NA** 271123			
	1000	500…1000	2000…12000	**NZMN4-AE1000-NA** 271121		**NZMH4-AE1000-NA** 271124			
	1200	600…1200	2400…14400	**NZMN4-AE1200-NA** 271122		**NZMH4-AE1200-NA** 271125			

Notes Notes for terminals → 10/58

	Rated current = rated uninterrupted current	Setting range Overload releases	Short-circuit releases Non-delayed	Short-circuit releases Delayed	Normal switching capacity 85 kA 240 V 60 Hz[1] 42 kA 480 V 60 Hz[2] 35 kA 600 V 60 Hz Part no. Article no.	Price see price list
	$I_n = I_u$	I_r	I_i	I_{sd}		
	A	A	A	A		
Systems, cable, transformer and generator protection						
3 pole Fixed overload releases Terminal screws standard, terminals as accessories						
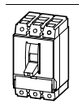	150	150	1800	300…1500	**NZMN2-VEF150-NA** 271126	
	175	175	2100	350…1750	**NZMN2-VEF175-NA** 271127	
	200	200	2400	400…2000	**NZMN2-VEF200-NA** 271128	
	225	225	2700	450…2250	**NZMN2-VEF225-NA** 271129	
	250	250	3000	500…2500	**NZMN2-VEF250-NA** 271130	
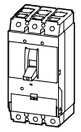	250	250	500…2750	500…2500	**NZMN3-VEF250-NA** 269308	
	300	300	600…3300	600…3000	**NZMN3-VEF300-NA** 269309	
	350	350	700…3850	700…3500	**NZMN3-VEF350-NA** 269310	
	400	400	800…4400	800…4000	**NZMN3-VEF400-NA** 269311	
	450	450	900…3600	675…3150	**NZMN3-VEF450-NA** 269312	
	500	500	1000…4000	750…3500	**NZMN3-VEF500-NA** 269313	
	550	550	1100…4400	825…3850	**NZMN3-VEF550-NA** 269314	
	600	600	1200…4800	900…4200	**NZMN3-VEF600-NA** 269315	
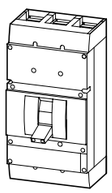	600	600	1200…7200	1200…6000	**NZMN4-VEF600-NA** 271136	
	700	700	1400…8400	1400…7000	**NZMN4-VEF700-NA** 271137	
	800	800	1600…9600	1600…8000	**NZMN4-VEF800-NA** 271138	
	900	900	1800…10800	1800…9000	**NZMN4-VEF900-NA** 271139	
	1000	1000	2000…12000	2000…10000	**NZMN4-VEF1000-NA** 271140	
	1200	1200	2400…14400	2400…12000	**NZMN4-VEF1200-NA** 271141	

Notes Notes for terminals → 10/51

High switching capacity 150 kA 240 V 60 Hz[3] 100 kA 480 V 60 Hz[4] 50 kA 600 V 60 Hz Part no. Article no.	Price see price list	Std. pack	Notes
NZMH2-VEF150-NA 271131		1 off	Switches conform to UL/CSA as well as the IEC regulations. IEC switching performance values are contained on the rating plate. UL 489, CSA-C22.2-5.1, IEC/EN 60947-2 Fixed overload releases I_r R.m.s. value measurement and 'thermal memory' Adjustable time delay setting to overcome current peaks t_r • 2 – 20 s with 6 × I_r (ex-works 10 s) Adjustable delayed short-circuit releases I_{sd} • 2 – 10 × I_r (ex-works 6 × I_r) – NZM...3-VEF450...600-NA: 1.5 – 7 × I_r (ex-works 6 × I_r) Adjustable delay time t_{sd} • Steps 0, 20, 60, 100, 200, 300, 500, 750, 1000 ms (ex-works 0 ms) Adjustable non-delayed short-circuit releases I_i • NZM2: fixed 12 × I_n • NZM...3-VEF250...400-NA: 2 – 11 × I_n (ex-works 11 × I_n) • NZM...3-VEF450...600-NA: 2 – 8 × I_n (ex-works 8 × I_n) • NZM...4-VEF...-NA: 2 – 12 × I_n (ex-works 12 × I_n) i^2t constant function • NZM2: fixed OFF • NZM3, NZM4 switched (ex-works OFF) [1] Normal switching capacity for NZMN2-…-NA: 35 kA/480 V [2] Normal switching capacity for NZMN2-…-NA: 25 kA/600 V [3] High switching capacity for NZMH4-...-NA: 125 kA/240 V [4] High switching capacity for NZMH4-...-NA: 85 kA/480 V
NZMH2-VEF175-NA 271132			
NZMH2-VEF200-NA 271133			
NZMH2-VEF225-NA 271134			
NZMH2-VEF250-NA 271135			
NZMH3-VEF250-NA 269316			
NZMH3-VEF300-NA 269317			
NZMH3-VEF350-NA 269318			
NZMH3-VEF400-NA 269319			
NZMH3-VEF450-NA 269320			
NZMH3-VEF500-NA 269321			
NZMH3-VEF550-NA 269322			
NZMH3-VEF600-NA 269323			
NZMH4-VEF600-NA 271142			
NZMH4-VEF700-NA 271143			
NZMH4-VEF800-NA 271144			
NZMH4-VEF900-NA 271145			
NZMH4-VEF1000-NA 271146			
NZMH4-VEF1200-NA 271147			

	Rated current = rated uninterrupted current	Setting range			Normal switching capacity **85 kA 240 V 60 Hz** **42 kA 480 V 60 Hz[1]** **35 kA 600 V 60 Hz[2]**	
		Overload releases	Short-circuit releases			
			Non-delayed	Delayed	**Part no.** Article no.	**Price** see price list
	$I_n = I_u$ A	I_r A	I_i A	I_{sd} A		
Systems, cable, transformer and generator protection						
3 pole						
Adjustable overload releases						
Terminal screws standard, terminals as accessories						
	100	50…100	1200	100…1000	**NZMN2-VE100-NA** 271148	
	160	80…160	1920	160…1600	**NZMN2-VE160-NA** 271149	
	250	125…250	3000	250…2500	**NZMN2-VE250-NA** 271150	
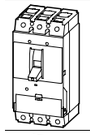	250	125…250	500…2750	250…2500	**NZMN3-VE250-NA** 269332	
	400	200…400	800…4400	400…4000	**NZMN3-VE400-NA** 269333	
	600	300…600	1200…4800	450…4200	**NZMN3-VE600-NA** 269334	
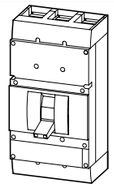	800	400…800	1600…9600	800…8000	**NZMN4-VE800-NA** 271154	
	1000	500…1000	2000…12000	1000…10000	**NZMN4-VE1000-NA** 271155	
	1200	630…1200	2400…14400	1260…12000	**NZMN4-VE1200-NA** 271156	

Notes Notes for terminals → 10/55

	Rated current = rated uninterrupted current	Setting range		Normal switching capacity **240 V 60 Hz** **480 V 60 Hz** **600 V 60 Hz**	
			Short-circuit releases	**Part no.** Article no.	**Price** see price list
	$I_n = I_u$ A		I_i A		
Short-circuit protection Motor protection in conjunction with contactor and overload relay • With short-circuit release • Without overload release 3 pole					
Terminal screws standard, terminals as accessories					
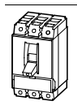	90		180…1260	**NZMN2-SE90-CNA** 271160	
	140		280…1960	**NZMN2-SE140-CNA** 271161	
	220		440…3080	**NZMN2-SE220-CNA** 271162	
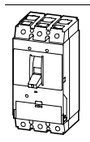	220		440…3080	**NZMN3-SE220-CNA** 269341	
	350		700…4900	**NZMN3-SE350-CNA** 269342	
	450		900…6300	**NZMN3-SE450-CNA** 284465	

Notes Notes for terminals → 10/51

High switching capacity **150 kA 240 V 60 Hz** **100 kA 480 V 60 Hz[3]** **50 kA 600 V 60 Hz[4]**			
Part no. Article no.	**Price** see price list	Std. pack	**Notes**
NZMH2-VE100-NA 271151		1 off	Switches conform to UL/CSA as well as the IEC regulations. IEC switching performance values are contained on the rating plate. UL 489, CSA-C22.2-5.1, IEC/EN 60947-2 Use in motor control circuits only in conjunction with a suitable contactor. Adjustable overload releases I_r • 0.5 – 1 × I_n R.m.s. value measurement and "thermal memory" Adjustable time delay setting to overcome current peaks t_r • 2 – 20 s with 6 × I_r (ex-works 10 s) Adjustable delayed short-circuit releases I_{sd} • 2 – 10 × I_r (ex-works 6 × I_r) – NZM...3-VE600-NA: 1.5 – 7 × I_r (ex-works 6 × I_r) Adjustable delay time t_{sd} • Steps: 0, 20, 60, 100, 200, 300, 500, 750, 1000 ms (ex-works 0 ms) Adjustable non-delayed short-circuit releases I_i • NZM2: fixed 12 × I_n • NZM...3-VE250/400-NA: 2 – 11 × I_n (ex-works 11 × I_n) • NZM...3-VE600-NA: 2 – 8 × I_n (ex-works 8 × I_n) • NZM...4-VE...-NA: 2 – 12 × I_n (ex-works 12 × I_n) i^2t constant function • NZM2 fixed OFF • NZM3, NZM4 switched (ex-works OFF) [1] Normal switching capacity for NZMN2-…-NA: 35 kA/480 V [2] Normal switching capacity for NZMN2-…-NA: 25 kA/600 V [3] High switching capacity for NZMH4-...-NA: 125 kA/240 V [4] High switching capacity for NZMH4-...-NA: 85 kA/480 V
NZMH2-VE160-NA 271152			
NZMH2-VE250-NA 271153			
NZMH3-VE250-NA 269335			
NZMH3-VE400-NA 269336			
NZMH3-VE600-NA 269337			
NZMH4-VE800-NA 271157			
NZMH4-VE1000-NA 271158			
NZMH4-VE1200-NA 271159			

Std. pack	**Notes**
1 off	Switches conform to UL/CSA as well as the IEC regulations. IEC switching performance values are contained on the rating plate. UL 489, CSA-C22.2-5.1, IEC/EN 60947-2and IEC/EN 60947-4 Adjustable short-circuit releases I_i • 2 – 14 × I_n (ex-works 12 × I_n) Without overload release I_r CNA: The device has components approved to UL, the conditions of approval must be observed during use. I.e. the device must be combined with a suitable contactor and overload relay. A switching capacity is stated for the complete motor-starter combination. The device is approved as a CSA approved single device.

	Rated current = rated uninterrupted current	Switching capacity At 480 V 60 Hz	Switching capacity At 600 V 60 Hz	Response range of the short-circuit releases	3 switch positions I, +, 0; can be tripped remotely with shunt/ undervoltage release **Part no.** Article no.	**Price** see price list	Std. pack	**Notes**
	$I_n = I_u$ A	kA	kA	I_i A				
Molded case switches These switches are especially recommended as incoming switches for the North American market. 3 pole								
Terminals standard, terminal screws as accessories								
	63	35		1250	**NS1-63-NA** 102681		1 off	The switches are equipped with a fixed set short-circuit release (own protection) and correspond to UL 489/CSA 22.2 No 5.1 regulation. Also the switches are tested to IEC/EN 60947-2 as circuit-breakers without overload protection (CBI-X) main-switch characteristics according to IEC/ EN 60204 and isolating characteristics according to IEC 60947.
	100	35		1250	**NS1-100-NA** 102682		1 off	
	125	35		1250	**NS1-125-NA** 102683		1 off	
Terminal screws standard terminals as accessories								
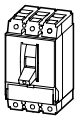	160	100	50	2500	**NS2-160-NA** 102684		1 off	The switches are equipped with a fixed set short-circuit release (own protection) and correspond to UL 489/CSA 22.2 No 5.1 regulation. Also the switches are tested to IEC/EN 60947-2 as circuit-breakers without overload protection (CBI-X) main-switch characteristics according to IEC/ EN 60204 and isolating characteristics according to IEC 60947.
	200	100	50	2500	**NS2-200-NA** 102685			
	250	100	50	2500	**NS2-250-NA** 102686			
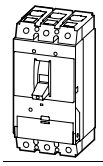	400	100	50	6600	**NS3-400-NA** 102687			
	600	100	50	6600	**NS3-600-NA** 102688			
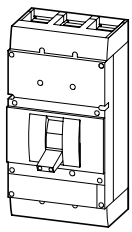	800	65	42	25000	**NS4-800-NA**[1] 102689			
	1000	65	42	25000	**NS4-1000-NA**[1] 102690			
	1200	65	35	25000	**NS4-1200-NA**[1] 102691			

Notes Notes for terminals → 10/47

N2, NS3 and N4 can also be combined with the NZM…-XR… remote operator.
Undervoltage and shunt releases NZM…-XU, NZM…-XA and trip indicating auxiliary contacts (HIA) can be used.

[1] Product available only on request.

With main switch characteristics to IEC/EN 60204 and isolating characteristics to IEC/EN 60947, VDE 660			Circuit-breakers 3-pole							Switch-disconnectors 3-pole Without overload and short-circuit release	
			System and cable protection			Selectively-opening circuit-breakers		Motor protection			
Switching capacity											
1000 V	kA/cos φ	*I*cu	101)/0.5	10/0.5	20/0.3	101)/0.5	20/0.3	10/0.5	20/0.3		
		*I*cs	3/0.5	10/0.5	15/0.3	3/0.5	15/0.3	10/0.5	15/0.3		
Rated uninterrupted current *I*u = rated current *I*n			*I*u	*I*u	*I*u	*I*u	*I*u	*I*u	*I*u	*I*u	*I*u
Ambient temperature at 100% *I*u min./max. –25/+50			A	A	A	A	A	A	A	A	A
			NZMH2-A...-S1	**NZMN3-AE...-S1**	**NZMH4-AE...-S1**	**NZMH2-VE...-S1**	**NZMH4-VE...-S1**	**NZMN3-ME...-S1**	**NZMH4-ME...-S1**	**N2-...-S1**	**N4-...-S1**
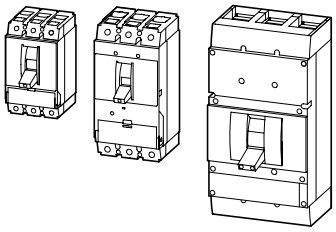			20	250	630	100	630	220	550	160	800
			25	400	800	160	800	350	875	200	1000
			32	**630**	1000	**250**	1000	**450**	**1400**	**250**	1250
			40		1250		1250				**1600**
			50		**1600**		**1600**				
			63								
			80								
			100								
			125								
			160								
			200								
			250								
Rated short-circuit making capacity I_{cm}		kA								5.5	53
Rated short-circuit - making capacity I_{cw} (1s curr eff)		kA								3.5	25

Notes 1) Please enquire

	Rated current = rateduninterrupted current	Short-circuit protection max. fuse gG/gL-characteristic	3 switch positions I, + , 0 ; can be tripped remotely with shunt/ under voltage release		Std. pack	Notes
	$I_n = I_u$ A	A gL	**Part no.** Article no.	**Price** see price list		
Switch-disconnector						
3-pole						
Terminal screws standard terminals as accessories						
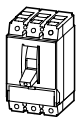	160	250	**N2-160-S1** 290386		1 off	IEC/EN 60947-3 Main switch characteristics including positive drive to IEC/EN 60204 and VDE 0113. Isolating characteristics to IEC/EN 60947 and VDE 0660. Protection against electric shock to VDE 0160 Part 100. Undervoltage and shunt releases NZM…-XU, NZM…-XA and trip indicating auxiliary contacts can also be with N switch-disconnectors. N2…and N4… can also be combined with the NZM…-XR… remote operator. Connection types N2: NZM2-XKSA cover necessary N4: insulated busbar connection (screw terminal NZM4-XKS)
	200	250	**N2-200-S1** 290387			
	250	250	**N2-250-S1** 290388			
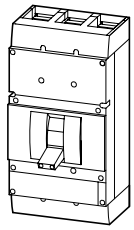	800	1600	**N4-800-S1** 290391			
	1000	1600	**N4-1000-S1** 290392			
	1250	1600	**N4-1250-S1** 290393			
	1600	1600	**N4-1600-S1** 290394			

Notes Accessories → plug-in/withdrawable unit on request

	Rated current = rated uninterrupted current $I_n = I_u$ A	Setting range Overload releases I_r A	Setting range Short-circuit releases I_{rm} A	Part no. Article no.	Price see price list	Std. pack	Notes
Protection of systems and cables							
3 pole							
Terminal screws standard, terminals as accessories							
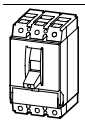	20	15…20	350	**NZMH2-A20-S1** 290355		1 off	IEC/EN 60947-2 Adjustable overload releases I_r • NZMH2-A...-S1: 0.8 – 1 × I_n (ex-works 0.8 × I_n) • NZMN3-AE...-S1: 0.5 – 1 × I_n (ex-works 0.5 × I_n) • NZMH4-AE...-S1: 0.5 – 1 × I_n (ex-works 0.5 × I_n) Adjustable short-circuit releases I_i • NZMH2-A40-S1: 8 – 10 × I_n (ex-works 8 × I_n) • NZMH2-A50...250-S1: 6 – 10 × I_n (ex-works 6 × I_n) • NZMN3-AE250/400-S1: 2 – 11 × I_n (ex-works 6 × I_n) • NZMN3-AE630-S1: 2 – 8 × I_n (ex-works 6 × I_n) • NZMH4-AE...-S1: 2 – 12 × I_n (ex-works 6 × I_n) Fixed short-circuit release I_i • 350 A at I_n = 20 – 32 A Connection types NZM2: NZM2-XKSA cover required NZM3: Cover NZM3-XKSA necessary NZM4: insulated busbar connection (screw terminal NZM4-XKS)
	25	20…25	350	**NZMH2-A25-S1** 290356			
	32	25…32	350	**NZMH2-A32-S1** 290357			
	40	32…40	320 – 400	**NZMH2-A40-S1** 290358			
	50	40…50	300 – 500	**NZMH2-A50-S1** 290359			
	63	50…63	380 – 630	**NZMH2-A63-S1** 290360			
	80	63…80	480 – 800	**NZMH2-A80-S1** 290361			
	100	80…100	600 – 1000	**NZMH2-A100-S1** 290362			
	125	100…125	750 – 1250	**NZMH2-A125-S1** 290363			
	160	125…160	960 – 1600	**NZMH2-A160-S1** 290364			
	200	160…200	1200 – 2000	**NZMH2-A200-S1** 290365			
	250	200…250	1500 – 2500	**NZMH2-A250-S1** 290366			
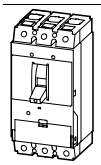	250	125…250	500 – 2750	**NZMN3-AE250-S1** 290367			
	400	200…400	800 – 4400	**NZMN3-AE400-S1** 290368			
	630	315…630	1260 – 5040	**NZMN3-AE630-S1** 290369			
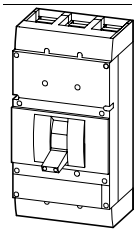	630	315…630	1260 – 7560	**NZMH4-AE630-S1** 290370			
	800	400…800	1600 – 9600	**NZMH4-AE800-S1** 290371			
	1000	500…1000	2000 – 12000	**NZMH4-AE1000-S1** 290372			
	1250	630…1250	2500 – 15000	**NZMH4-AE1250-S1** 290373			
	1600	800…1600	3200 – 19200	**NZMH4-AE1600-S1** 290374			

Notes Accessories → Plug in and withdrawable units on request

	Rated current = rated uninterrupted current	Setting range Overload releases	Short-circuit releases		Part no. Article no.	Price see price list	Std. pack
	$I_n = I_u$ A	I_r A	Non-delayed I_i A	Delayed I_{sd} A			
Protection of systems and cables							
3 pole							
Terminal screws standard, terminals as accessories							
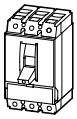	100	50…100	1200	100…1000	**NZMH2-VE100-S1** 100777		1 off
	160	80…160	1920	160…1600	**NZMH2-VE160-S1** 100778		
	250	125…250	2000	250…2500	**NZMH2-VE250-S1** 100779		
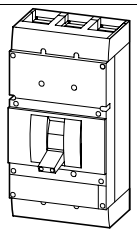	630	315…630	1260 – 7560	630…6300	**NZMH4-VE630-S1** 290375		
	800	400…800	1600 – 9600	800…8000	**NZMH4-VE800-S1** 290376		
	1000	500…1000	2000 – 2000	1000…10000	**NZMH4-VE1000-S1** 290377		
	1250	630…1250	2500 – 15000	1250…12500	**NZMH4-VE1250-S1** 290378		
	1600	800…1600	3200 – 19200	1600…16000	**NZMH4-VE1600-S1** 290379		
Motor protection							
3 pole							
Terminal screws standard, terminals as accessories							
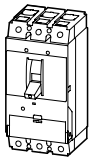	220	110…220	220…3080		**NZMN3-ME220-S1** 290380		1 off
	350	175…350	350…4900		**NZMN3-ME350-S1** 290381		
	450	225…450	450…6300		**NZMN3-ME450-S1** 290382		
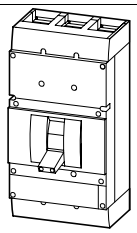	550	275…550	550…7700		**NZMH4-ME550-S1** 290383		
	875	438…875	875…1250		**NZMH4-ME875-S1** 290384		
	1400	700…1400	1400…19600		**NZMH4-ME1400-S1** 290385		

Notes

Accessories → Plug in and withdrawable units on request
IEC/EN 60947-2
Adjustable overload releases I_r
• 0.5 – 1 × I_n (ex-works 0.8 × I_n)
R.m.s. value measurement and "thermal memory"
Adjustable time delay setting to overcome current peaks t_r
• 2 … 20 s with 6 × I_r as well as infinity (without overload release) (ex-factory 10 s)
Adjustable delayed short-circuit releases I_{sd}
• 2 – 10 × I_r (ex-works 6 × I_r)
Adjustable delay time t_{sd}
Steps: 0, 20, 60, 100, 200, 300, 500, 750, 1000 ms (ex-works 0 ms)
Adjustable non-delayed short-circuit releases I_i
• NZM2 fixed 12 × I_n
• NZM4: 2 – 12 × I_n (ex-works 12 × I_n)
i^2t constant function
• NZM2 fixed OFF
• NZM4 switched (OFF ex-works)
2)IEC/EN 60947-2
Trip block with motor protection characteristic
Adjustable overload releases I_r
• 0.5 – 1 × I_n (ex-works 0.8 × I_n)
R.m.s. value measurement and thermal memory
Adjustable time delay setting to overcome current peaks t_r
• 2 – 20 s with 6 × I_r also infinity (without overload release) (ex-works 10 s)
Phase failure sensivity
Adjustable short-circuit releases I_i
• 2 – 14 × I_r (ex-works 12 × I_r)
Connections:
NZM3: NZM3-XKSA cover necessary
NZM4: Insulated busbar connection (NZM4-XKS screw terminal)
Connection types
NZM2: NZM2-XKSA cover required
NZM4: insulated busbar connection (screw terminal NZM4-XKS)

	Max. cable connection area	For use with		Terminal capacities Type of conductor	mm²	AWG/kcmil
Box terminal						
Standard equipment						
	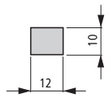	NZM1(-4), PN1(-4), N(S)1(-4)	Three- and four-pole	Cu cable	1 × 10 – 70[1)] 2 × 6 – 25	1 × 8 – 2/0 2 × 9 – 4
Screw connection						
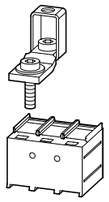	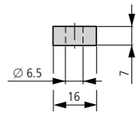	NZM1(-4), PN1(-4), N(S)1(-4)	Three- and four-pole	Copper cable lugs Aluminium cable lug	1 × 10 – 70 2 × 6 – 25 1 × 10 – 35 2 × 10 – 35	1 × 8 – 2/0 2 × 9 – 4 1 × 8 – 2 2 × 8 – 2
Tunnel terminal						
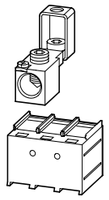		NZM1(-4), PN1(-4), N(S)1(-4)	Three- and four-pole	Copper cable Al cable	1 × 16 – 95	1 × 6 – 3/0 –
Connection on rear						
not UL/CSA approved						
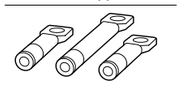	–	NZM1(-4), PN1(-4), N(S)1(-4)	Three- and four-pole	Copper cable lugs Aluminium cable lug	1 × 2.5 – 25 2 × 2.5 – 25 1 × 10 – 35 2 × 10 – 35	

Notes [1)] Up to 240 mm² can be connected depending on the cable manufacturer.

Terminal capacities Cu strip (number of segments × width × segment thickness) mm	Copper busbar width × thickness mm	**Part no.** Article no. when ordered separately		Std. pack	**Notes**
2 × 9 × 0.8 9 × 9 × 0.8		**NZM1-XKC** 260015 **NZM1-4-XKC** 267075		1 off 1 off	Standard connection with all switches NZM1, PN1 and N(S)1. Conversion kit for circuit-breaker with screw connection. Type contains parts for a 3 or 4-pole switch side. Fitted within the switch housing
	min. 12 × 5 max. 16 × 5 min. 12 × 5 max. 16 × 5	**NZM1-XKS** 260019 **NZM1-4-XKS** 266725		1 off 1 off	Type contains parts for a terminal located at top or bottom for 3 or 4-pole circuit-breakers. Fitted outside the switch housing Mounting of the cover NZM1(-4)-XKSA obligatory (supplied).
		NZM1-XKA 266730 **NZM1-4-XKA** 266731		1 off 1 off	Type contains parts for a terminal located at top or bottom for 3 or 4-pole circuit-breakers. A standard with control circuit terminal for 1 × 0.75 – 2.5 mm² (18 – 14 AWG) or 2 × 0.75 – 1.5 mm² (18 – 14 AWG) copper conductors. Fitted outside the switch housing Use with flexible and highly flexible conductors ferrules. Maximum specified cross-section can only be connected when stranded and without ferrules. Mounting of the cover NZM1(-4)-XKSA obligatory (supplied).
	≦ 12 × 5 ≦ 16 × 5	**NZM1-XKR** 266734 **NZM1-4-XKR** 266737		1 off 1 off	Type contains parts for a terminal located at top or bottom for 3 or 4-pole circuit-breakers.

xEnergy **NZM1** Moeller HPL0211-2007-2008 http://catalog.moeller.net

	Max. cable connection area	For use with		Terminal capacities Type of conductor	mm²	AWG/kcmil	Part no. Article no. when ordered separately	Std. pack	Notes
Control circuit terminal									
	–	NZM1(-4), PN1(-4), N(S)1(-4)	Three- and four-pole	Screw connection	1 × 0.75 – 2.5 2 × 0.75 – 1.5	1 × 18 – 14 2 × 18 – 16	**NZM1-XSTS** 260150	1 off	Type contains parts for two terminal locations located at top or bottom for 3 or 4-pole circuit-breakers. Included as standard with tunnel terminal Degree of protection IP1X NZM-XSTK cannot be combined with NZM1(-4)-XIPK IP2X protection against contact with a finger. Height or thickness of the control terminals: NZM-XSTK = 2 mm NZM-XSTS = 2 mm
	–			Box terminal			**NZM-XSTK** 266739	1 off	
Cover									
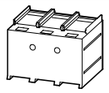	–	NZM1(-4), PN1(-4), N(S)1(-4)	3 pole				**NZM1-XKSA** 260021	1 off	Type contains parts for a terminal located at top or bottom for 3 or 4-pole circuit-breakers. Protection against direct contact where cable lugs, busbars or tunnel terminals are used Contained in kit with tunnel terminals or screw connection terminals. Degree of protection IP1X on the connection side when using insulated conductor material.
	–		4 pole				**NZM1-4-XKSA** 266741	1 off	
Terminal cover, knockout, not UL/CSA approved									
For box terminals									
	–	NZM1, PN1, N1	3-pole				**NZM1-XKSFA** 100780	1 off	Type contains parts for a terminal located at top or bottom for3 or 4 pole circuit-breakers. Enhancement of the protection against direct contact (simple finger protection).
	–	NZM1(-4), PN1(-4), N1(-4)	4 pole				**NZM1-4-XKSFA** 100781	1 off	
IP2X protection against contact with a finger									
For box terminals									
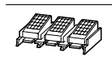	–	NZM1, PN1, N1	3 pole				**NZM1-XIPK** 266744	1 off	Type contains parts for a terminal located at top or bottom for3 or 4-pole circuit-breakers. Enhancement of the protection against direct contact to IP2X. Protection when reaching into the cable connection area with the connection of cables in the box terminal. Cannot be combined with NZM-XSTK control circuit terminal.
	–	NZM1(-4), PN1(-4), N1(-4)	4 pole				**NZM1-4-XIPK** 266745	1 off	
For cover NZM1(-4)-XKSA or NZM1...(C)NA, N(S)1...NA									
	–	NZM1, PN1, NS1	3 pole				**NZM1-XIPA** 266748	1 off	Type contains parts for a terminal located at top or bottom for 3 or 4-pole circuit-breakers. Enhancement of the protection against direct contact to IP2X.
	–	NZM1(-4), PN1(-4), N1(-4)	4 pole				**NZM1-4-XIPA** 266749	1 off	

http://catalog.moeller.net Moeller HPL0211-2007-2008 NZM1 xEnergy

Circuit-breakers, switch-disconnectors

	Max. cable connection area	For use with		Terminal capacities Type of conductor	Terminal capacities	AWG/kcmil	Terminal capacities Cu strip (number of segments × width × segment thickness)
					mm²		mm
Box terminal							
	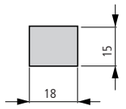	NZM2(-4), PN2(-4), N(S)2(-4)	Three- and four-pole	Copper conductors Cu cable	1 × 4 – 185 2 × 4 – 70	1 × 11 – 350 2 × 12 – 2/0	≧ 2 × 9 × 0.8
Screw connection							
Standard equipment							
	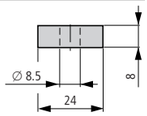	NZM2(-4), PN2(-4), N(S)2(-4)	Three- and four-pole	Copper cable lugs Aluminium cable lug	1 × 4 – 185 2 × 4 – 70 1 × 10 – 50 2 × 10 – 50	1 × 11 – 3/0 2 × 12 1 × 8 – 1/0 2 × 8 – 1/0	≧ 2 × 16 × 0.8
Tunnel terminal							
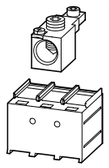		NZM2(-4), PN2(-4), N(S)2(-4)	Three- and four-pole	Copper cable Al cable	1 × 16 … 185 1 × 16 … 185	1 × 6 – 350 –	
Connection on rear							
not UL/CSA approved When using cable lugs **without** NZM3(-4)-XKSA cover, they must be insulated.							
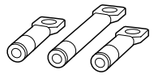		NZM2(-4), PN2(-4), N2(-4)	Three- and four-pole	Copper cable lugs Aluminium cable lug	1 × 4 – 185 2 × 4 – 70 1 × 10 – 50 2 × 10 – 50		≧ 2 × 16 × 0.8 ≦ 6 × 24 × 0.5

Notes [1] Up to 240 mm² can be connected depending on the cable manufacturer.

Copper busbar width × thickness	Part no. Article no. when ordered with basic unit	Part no. Article no. when ordered separately	Std. pack	Notes
mm				
	+NZM2-160-XKCO 262218	**NZM2-160-XKC** 262240	1 off	Type suffix and type contain parts for a circuit-breaker side at top or bottom for 3 or 4 pole circuit-breakers. Conversion kit for circuit-breaker with screw connection. Fitted within the switch housing O = for fitting at the top U = for fitting at the bottom U_e ≧ 525 V AC: • Use cover NZM2(4)-XKSA. Use ferrules with flexible and highly flexible conductors. Max. cross section shown can only be connected when flexible and without ferrules.
	+NZM2-160-XKCU 262223			
	+NZM2-250-XKCO 262242	**NZM2-250-XKC** 262244		
	+NZM2-250-XKCU 262243			
	+NZM2-4-160-XKCO 266751	**NZM2-4-160-XKC** 266755		
	+NZM2-4-160-XKCU 266753			
	+NZM2-4-250-XKCO 266752	**NZM2-4-250-XKC** 266756		
	+NZM2-4-250-XKCU 266754			
≧ 16 × 5		**NZM2-XKS** 260030	1 off	Type contains parts for a terminal located at top or bottom for 3 or 4 pole circuit-breakers. Standard connection with all NZM2, PN2 and N2 circuit-breakers. Conversion kit for circuit-breaker with box terminal. Use special cable lug narrow version, 059775 Fitted within the switch housing If a busbar is used, insulation (400 mm) e.g sleeving and a NZM2(-4)-XKSA cover are required. U_e ≧ 525 V AC: • For all other connection material a NZM2(-4)-XKSA shroud must be used.
		NZM2-4-XKS 266750	1 off	
		NZM2-XKA 271457	1 off	Type contains parts for a terminal located at top or bottom for 3 or 4-pole circuit-breakers. A standard with control circuit terminal for 1 × 0.75 – 2.5 mm² (18 – 14 AWG) or 2 × 0.75 – 1.5 mm² (18 – 16 AWG) copper conductors. Fitted outside the switch housing Use with flexible and highly flexible conductors ferrules. Maximum specified cross-section can only be connected when stranded and without ferrules. Mounting of the cover NZM2(-4)-XKSA obligatory (supplied).
		NZM2-4-XKA 271458	1 off	
≧ 16 × 5 ≦ 20 × 5	**+NZM2-XKRO** 266763	**NZM2-XKR** 266765	1 off	Type suffix and type contain parts for a circuit-breaker side at top or bottom for 3 or 4-pole circuit-breakers. O = for fitting at the top U = for fitting at the bottom
	+NZM2-XKRU 266764	**NZM2-4-XKR** 266768		
	+NZM2-4-XKRO 266766			
	+NZM2-4-XKRU 266767			

	Max. cable connection area	For use with		Terminal capacities Type of conductor	Terminal capacities mm²	AWG/kcmil
Control circuit terminal						
		NZM2(-4), PN2(-4), N(S)2(-4)	Three- and four-pole	Screw connection	1 × 0.75 – 2.5 2 × 0.75 – 1.5	1 × 18 – 14 2 × 18 – 16
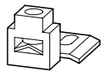		NZM3(-4), PN3, N(S)3(-4)	Three- and four-pole	Box terminal	1 × 0.75 – 2.5 2 × 0.75 – 1.5	1 × 18 – 14 2 × 18 – 16
Cover						
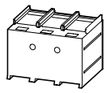		NZM2, PN2, NS2 DS6-340-75K…110K	3 pole			
		NZM2(-4), PN2(-4), N2(-4)	4 pole			
Connection cover, knockout						
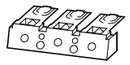		NZM2, PN2, N(S)2 DS6-340-75K…110K	3 pole			
		NZM2(-4), PN2(-4), N2(-4)	4 pole			
IP2X protection against contact with a finger						
For box terminals						
		NZM2, PN2, N(S)2 DS6-340-75K…110K	3 pole			
		NZM2(-4), PN2(-4), N2(-4)	4 pole			
For covers NZM2(-4)-XKSA or NZM2(-4) or NZM2...(C)NA and N(S)2...NA						
		NZM2, PN2, N(S)2 DS6-340-75K…110K	3 pole			
		NZM2(-4), PN2(-4), N2(-4)	4 pole			
Copper cable lug						
not UL/CSA approved When using cable lugs **without** NZM3(-4)-XKSA cover, they must be insulated.						
	95 mm²	NZM2(-4), PN2(-4), N2(-4)	Three- and four-pole			
	120 mm²					
	150 mm²					
	185 mm²					

Copper busbar width × thickness mm	**Part no.** Article no. when ordered separately	Std. pack	**Notes**
	NZM2-XSTS 260156	1 off	Type contains parts for two terminal locations located at top or bottom for 3 or 4-pole circuit-breakers. Included as standard with tunnel terminal Degree of protection IP1X NZM-XSTK cannot be combined with NZM2(-4)-XIPK IP2X protection against contact with a finger. Height or thickness of the control circuit terminals: NZM-XSTK = 2 mm NZM-XSTS = 2 mm
	NZM-XSTK 266739	1 off	
	NZM2-XKSA 260038	1 off	Type contains parts for a terminal located at top or bottom for 3 or 4-pole circuit-breakers. Protection against direct contact where cable lugs, busbars or tunnel terminals are used Degree of protection IP1X on the connection side when using insulated conductor material.
	NZM2-4-XKSA 266770	1 off	
	NZM2-XKSFA 104640	1 off	Type contains parts for a terminal located at top or bottom for 3 or 4-pole circuit-breakers. Enhancement of the protection against direct contact (simplified protection against contact with a finger).
	NZM2-4-XKSFA 104641	1 off	
	NZM2-XIPK 266773	1 off	Type contains parts for a terminal located at top or bottom for3 or 4-pole circuit-breakers. Enhancement of the protection against direct contact to IP2X. Protection when reaching into the cable connection area with the connection of cables in the box terminal. With 2 conductors minimum cross-section 25 mm² or AWG4. Cannot be combined with NZM-XSTK control circuit terminal.
	NZM2-4-XIPK 266774	1 off	
	NZM2-XIPA 266777	1 off	Type contains parts for a terminal located at top or bottom for 3 or 4-pole circuit-breakers. Enhancement of the protection against direct contact to IP2X. When mounting NZM2-..-(C)NA or NZM...-NA the following applies: With 2 conductors minimum cross-section 25 mm² or AWG4.
	NZM2-4-XIPA 266778	1 off	
	KS95-NZM7 059775	3 off	Type contains a cable lug for 3-pole or 4-pole switches. Special cable lug, narrow style
	KS120-NZM7 059776		
	KS150-NZM7 059777		
	NZM2-XKS185 260032		

	Max. cable connection area	Rated current[1)] I_n A	For use with	For use with	Terminal capacities Type of conductor	Terminal capacities mm²	AWG/kcmil
Box terminal							
	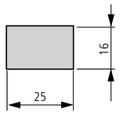	max. 500 400 UL/CSA	NZM3(-4), PN3(-4), N(S)3(-4)	Three- and four-pole	Copper conductors Cu cable	1 × 35 – 240 2 × 16 – 120	1 × 2 – 500
		630				1 × 35 – 240 2 × 16 – 120	1 × 2 – 500
Screw connection							
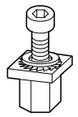	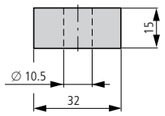	630	NZM3(-4), PN3(-4), N(S)3(-4)	Three- and four-pole	Copper cable lugs Aluminium cable lug	1 × 16 – 240 2 × 16 – 240 1 × 10 – 120 2 × 10 – 120	1 × 4 – 350 2 × 350
		max. 400					
Connection width extension							
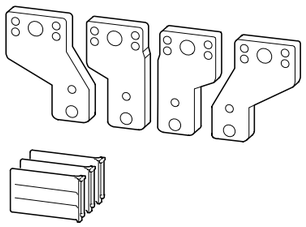		630	NZM3(-4), PN3(-4), N(S)3(-4)	Three- and four-pole	Copper cable lugs Aluminium cable lug	2 × 300	2 × 500

Notes [1)] The following applies for the rated current: The values have been determined conform to IEC/EN 60947 (switchgear standard) and generally relate to the max. defined cross-sections and are intended for the purpose of orientation.

Terminal capacities Cu strip (number of segments × width × segment thickness) mm	Copper busbar width × thickness mm	**Part no.** Article no. when ordered with basic unit	**Part no.** Article no. when ordered separately	Std. pack	**Notes**
Box terminal					
min. 6 × 16 × 0.8 max. 20 × 24 × 0.5 or max. 11 × 21 × 1		**+NZM3-XKCO** 262246	**NZM3-XKC** 260042	1 off	Type suffix and type contain parts for a circuit-breaker side at top or bottom for 3 or 4-pole circuit-breakers. Conversion kit for circuit-breaker with screw connection. Fitted within the switch housing O = for fitting at the top U = for fitting at the bottom U_e ≧ 525 V AC: • Use NZM3(-4)-XKSA cover. Use with flexible and highly flexible conductors ferrules, note the max. terminal capacity when using ferrules.
		+NZM3-XKCU 262245			
min. 6 × 16 × 0.8 max. 20 × 24 × 0.5 or max. 11 × 21 × 1		**+NZM3-4-XKCO** 266781	**NZM3-4-XKC** 266783		
		+NZM3-4-XKCU 266782			
Screw connection					
10 × 32 × 1.0 + 5 × 32 × 1.0	30 × 10 + 30 × 5		**NZM3-XKS** 260039	1 off	Type contains parts for a terminal located at top or bottom for 3 or 4-pole circuit-breakers. Standard connection with all NZM3, PN3 and N3 circuit-breakers. Conversion kit for circuit-breaker with box terminal. Use special cable lugs narrow version, → 10/53 Fitted within the switch housing When a busbar is used insulation is required (400 mm) e.g. using heat shrink and a shroud NZM3(-4)-XKSA. U_e ≧ 525 V AC: A shroud NZM3(-4)-XKSA must be used with all other connection types.
			NZM3-4-XKS 266780	1 off	
Connection width extension					
(2 ×) 10 × 50 × 1.0	(2 ×) 10 × 50		**NZM3-XKV70** 100514	1 off	Type contains parts for a terminal located at top or bottom for3 or 4 pole circuit-breakers. Central drill holes, e.g. for up to 2 cable lugs per phase. Can be fitted to circuit-breaker with screw termination Phase isolator supplied. Distance between pole centres with NZM3(-4)-XKV70: 70 mm Drill hole available for control cable. Connection terminals NZM3(-4)-XK300 and NZM3(-4)-XK22X21 can be installed.
			NZM3-4-XKV70 100515	1 off	

	Max. cable connection area	Rated current[1] I_n A	For use with	For use with	Terminal capacities: Type of conductor	Terminal capacities: Terminal capacities mm²	AWG/kcmil
Terminals for connection width extension							
		max. 500	NZM3, PN3, N(S)3	3 pole	Cu cable	1 × 120 – 300	
			NZM3(-4), PN3(-4), N3(-4)	4 pole			
not UL/CSA approved		630	NZM3, PN3, N(S)3	3 pole			
			NZM3(-4), PN3(-4), N3(-4)	4 pole			
Tunnel terminal							
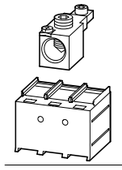	–	max. 350	NZM3(-4), PN3(-4), N(S)3(-4)	Three- and four-pole	Copper conductors Cu cable Al conductors Al cable	1 × 16 – 185[2]	1 × 6 – 350 –
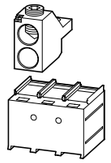	–	max. 630				1 × 50 – 240 2 × 50 – 240	1 × 0 – 500 2 × 0 – 500
Connection on rear							
not UL/CSA approved 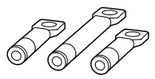		max. 630	NZM3(-4), PN3(-4), N3(-4)	Three- and four-pole	Copper cables Cu cable	1 × 16 – 240 2 × 16 – 240	
		max. 500	–	–		1 × 10 – 120 2 × 10 – 120	
Control circuit terminal							
		–	NZM3(-4), PN3, N(S)3(-4)	Three- and four-pole	Screw connection	1 × 0.75 – 2.5 2 × 0.75 – 1.5	1 × 18 – 14 2 × 18 – 16
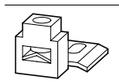		–	NZM3(-4), PN3, N(S)3(-4)		Box terminal		

Notes

[1] The following applies for the rated current: The values have been determined conform to IEC/EN 60947 (switchgear standard) and generally relate to the max. defined cross-sections and are intended for the purpose of orientation.
The engineering standards which apply in each case must be observed.

Terminal capacities: Cu strip (number of segments × width × segment thickness) mm	Terminal capacities: Copper busbar width × thickness mm	Part no. Article no. when ordered with basic unit	Part no. Article no. when ordered separately	Std. pack	Notes
			NZM3-XK300 100782	1 off	Type contains parts for a terminal located at top or bottom for 3 or 4-pole circuit-breakers. Only in conjunction with connection width extension NZM3(-4)-XKV70. Use with flexible and highly flexible conductors ferrules. Standard with control circuit terminal for 1 × 0.75 – 2.5 mm² or 2 × 0.75 – 1.5 mm² copper conductors.
			NZM3-4-XK300 100783	1 off	
(2 ×) 11 × 21 × 1.0			**NZM3-XK22X21** 100784	1 off	
(2 ×) 11 × 21 × 1.0			**NZM3-4-XK22X21** 100785	1 off	
			NZM3-XKA1 271459	1 off	Type contains parts for a terminal located at top or bottom for 3 or 4-pole circuit-breakers. A standard with control circuit terminal for 1 × 0.75 – 2.5 mm² (18 – 14 AWG) or 2 × 0.75 – 1.5 mm² (18 – 16 AWG) copper conductors. Fitted outside the switch housing Use with flexible and highly flexible conductors ferrules. Maximum specified cross-section can only be connected when stranded and without ferrules. Mounting of the cover NZM3(-4)-XKSA obligatory (supplied).
			NZM3-4-XKA1 271460	1 off	
			NZM3-XKA2 271461	1 off	
			NZM3-4-XKA2 271462	1 off	
		+NZM3-XKRO 266790	**NZM3-XKR** 266792	1 off	Type suffix and type contain parts for a circuit-breaker side at top or bottom for 3 or 4-pole circuit-breakers. O = for fitting at the top U = for fitting at the bottom
		+NZM3-XKRU 266791	**NZM3-4-XKR** 266795	1 off	
		+NZM3-4-XKRO 266793			
		+NZM3-4-XKRU 266794			
min.6 × 16 × 0.8 Max. 10 × 32 × 1.0	Min. 20 × 5 Max. 30 × 10				
			NZM3/4-XSTS 266797	1 off	Type contains parts for two terminal locations located at top or bottom for 3 or 4 pole circuit-breakers. Included as standard with tunnel terminal Degree of protection IP1X Height or thickness of the control circuit terminals NZM-XSTS = 2 mm
			NZM-XSTK 266739	1 off	

	Max. cable connection area	For use with For use with	For use with	Part no. Article no. when ordered separately	Std. pack	Notes
Cover						
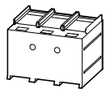 –	–	NZM3(-4), PN3(-4), N(S)3(-4)	3 pole	**NZM3-XKSA** 260045	1 off	Type contains parts for a terminal located at top or bottom for 3 or 4-pole circuit-breakers. Insulation/protection against direct contact where cable lugs, busbars or tunnel terminals are used. Included in set with tunnel terminals Degree of protection IP1X on the connection side when using insulated conductor material.
–	–		4 pole	**NZM3-4-XKSA** 266801	1 off	
Phase isolator						
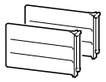 –	–	NZM3(-4), PN3(-4), N(S)3(-4)	3 pole	**NZM3-XKP** 100512	1 off	Type contains parts for a terminal located at top or bottom for3 or 4 pole circuit-breakers. Included with the connection width extension. Cannot be combined with the NZM3(-4)-XKA tunnel terminal, NZM3(-4)-XKR connection on rear. Insulation protection with connection of cable lugs, busbars or braid.
–	–		4 pole	**NZM3-4-XKP** 100513	1 off	
Connection cover, knockout						
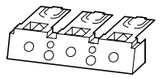 –	–	NZM3(-4), PN3(-4), N(S)3(-4)	3 pole	**NZM3-XKSFA** 104642	1 off	Type contains parts for a terminal located at top or bottom for 3 or 4-pole circuit-breakers. Enhancement of the protection against direct contact to (simplified protection against contact with a finger).
–	–		4 pole	**NZM3-4-XKSFA** 104643	1 off	
IP2X protection against contact with a finger						
	–	NZM3(-4), PN3(-4), N3(-4)	3 pole	**NZM3-XIPK** 266804	1 off	Type contains parts for a terminal located at top or bottom for 3 or 4-pole circuit-breakers. Enhancement of the protection against direct contact to IP2X. Protection when reaching into the cable connection area with the connection of cables in the box terminal. With 2 conductors minimum cross-section 70 mm² 00 or AW00. Cannot be combined with NZM-XSTK control circuit terminal.
			4 pole	**NZM3-4-XIPK** 266805	1 off	
For cover NZM3(-4)-XKSA or NZM3...(C)NA and N(S)3...NA						
	–	NZM3(-4), PN3(-4), N(S)3(-4)	3 pole	**NZM3-XIPA** 266808	1 off	Type contains parts for a terminal located at top or bottom for 3 or 4-pole circuit-breakers. Enhancement of the protection against direct contact to IP2X. When mounting NZM3-..-(C)NA or N3...-NA the following applies: With 2 conductors minimum cross-section 70 mm² 00 or AW00.
	–		4 pole	**NZM3-4-XIPA** 266809	1 off	
Copper cable lug						
not UL/CSA approved When using cable lugs **without** NZM3(-4)-XKSA cover, they must be insulated.						
185 mm²	–	NZM3(-4), PN3, N(S)3(-4) NZM4(-4), N(S)4(-4)	3 and 4 pole	**NZM3-XKS185** 260040	3 off	Type contains a cable lug for 3-pole or 4-pole switches. Special cable lug, narrow style
900 mm²	–		3 and 4 pole	**NZM3-XKS240** 260041	3 off	

		Max. cable connection area	Rated current I_n A	For use with		Terminal capacities: Type of conductor	Terminal capacities: Terminal capacities mm²	Terminal capacities: AWG/kcmil
Screw connection								
Standard equipment								
	2-hole	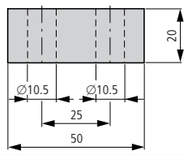	max. 1250	NZM4(-4) N4(-4) N(S)4	Three- and four-pole	Cu cable lugs	1 × 120 – 185 4 × 50 – 185	1 × 250 – 350 4 × 0 – 350
			1600					
	3-hole	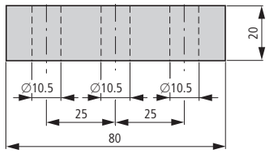	2000	NZM4	3 pole	Cu cable lugs		
Module plate								
	Single hole		max. 1250	NZM4, N(S)4	3 pole	Copper cable lugs	1 × 120 – 300 2 × 95 – 300	1 × 250 – 600 2 × 000 – 600
				NZM4-4, N4-4	4 pole			
	Double hole		max. 1400	NZM4, N(S)4	3 pole	Copper cable lugs	2 × 95 – 185 4 × 35 – 185 4 × 50	2 × 000 – 350 4 × 2 – 350
				NZM4-4, N4-4	4 pole			
	Double hole		max. 1250	NZM4, N(S)4	3 pole	Copper cable lugs	2 × 95 – 300	2 × 000 – 600
				NZM4-4, N4-4	4 pole			
			max. 1600	NZM4, N(S)4	3 pole	Copper cable lugs	2 × 95 – 300	2 × 000 – 500
				NZM4-4, N4-4	4 pole		2 × 95 – 300	2 × 000 – 500
Connection width extension								
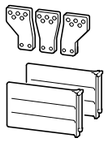			max. 1600	NZM4, N(S)4	3 pole	Cu cable lugs	4 × 300 6 × 95 – 240	4 × 600 6 × 000 … 500
				NZM4-4, N4-4	4 pole			

Notes [1] The following applies for the rated current: The values have been determined conform to IEC/EN 60947 (switchgear standard) and generally relate to the max. defined cross-sections and are intended for the purpose of orientation.

Terminal capacities: Cu strip (number of segments × width × segment thickness) mm	Copper busbar width × thickness mm	Part no. Article no. when ordered separately	Std. pack	Notes
(2 ×) 10 × 50 × 1.0	(2 ×) 50 × 10		off	Double hole fitting for M10 screws with 25 mm clearance. Use special cable lug narrow version. U_e ≧ 525 V or cross-section > 185 mm²: Use of shroud NZM4(-4)-XKSA required.
			off	
	(2 ×) 80 × 10		off	Triple hole fitting for M10 screws with 25 mm pitch. Phase divider for insultion above is supplied.
(2 ×) 10 × 40 × 1.0 (2 ×) 10 × 50 × 1.0	(2 ×) 40 × 10 (2 ×) 50 × 10	**NZM4-XKM1** 266814	1 off	Type contains parts for a terminal located at top or bottom for 3 or 4-pole circuit-breakers. For M10 screws. Can be enlarged for M12 screws. Use special cable lug narrow version. Can be fitted to circuit-breaker with screw termination Insulation through NZM4(-4)-XKSA cover or NZM4(-4)-XKP phase separator necessary
		NZM4-4-XKM1 266815	1 off	
		NZM4-XKM2 266820	1 off	
		NZM4-4-XKM2 266821	1 off	
		NZM4-XKM2S-1250 284471	1 off	Type contains parts for a terminal located at top or bottom for 3 or 4-pole circuit-breakers. Insulation through cover NZM4(-4)-XKSA or phase isolator NZM4(4)-XKP necessary.
		NZM4-4-XKM2S-1250 284472	1 off	
		NZM4-XKM2S-1600 284473	1 off	
		NZM4-4-XKM2S-1600 284474	1 off	
min.10 × 50 × 1.0	max. (2 ×) 80 × 10	**NZM4-XKV95** 281591	1 off	Type contains parts for a terminal located at top or bottom for 3 or 4-pole circuit-breakers. Five way holes, e.g. for up to 9 cable lugs per phase. Can be fitted to circuit-breaker with screw termination Phase isolator supplied. Distance between pole centres with NZM4(-4)-XKV95: 95 mm Installation conditions for current transformer up to 130 mm width with 80 mm busbar width. Distance between pole centres with NZM4-XKV110: 107.5 mm Installation conditions for current transformer up to 135 mm width with 80 mm busbar width. Distance between pole centres with NZM4-4-XKV120: 122 mm Installation conditions for current transformer up to 164 mm width with 80 mm busbar width. 4 mm drilled holes for control circuit terminal available.
		NZM4-XKV110 281593	1 off	
		NZM4-4-XKV95 281592	1 off	
		NZM4-4-XKV120 281594	1 off	

		Max. cable connection area	Rated current I_n A	For use with For use with	For use with	Terminal capacities Type of conductor	Terminal capacities mm²	AWG/kcmil
Flat cable terminal								
	–		max. 1100	NZM4, N(S)4	3 pole			
	–			NZM4-4, N4-4	4 pole			
Tunnel terminal								
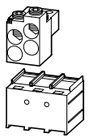	–		max. 1400	NZM4, N(S)4	3 pole	Copper conductors Cu cable Al conductors Al cable	1 × 50 – 240 4 × 50 – 240 1 × 50 – 240 4 × 50 – 240	1 × 0 – 500 4 × 0 – 500 1 × 0 – 500 4 × 0 – 500
	–			NZM4-4, N4-4	4 pole			
Connection on rear not UL/CSA approved								
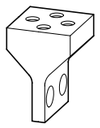	–		max. 1250	NZM4(-4), N4(-4)	Three- and four-pole	Copper cable lugs Aluminium cable lug	1 × 120 – 185 2 × 95 – 185 4 × 35 – 185 1 × 185 2 × 70 – 185 4 × 50 – 185	
	–		1600		–			
NZM4/NZM14 adapter kit not UL/CSA approved								
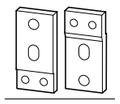	–		max. 1250	NZM4, N4	3 pole			
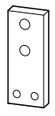	–		1600	NZM4, N4	3 pole			

Notes [1] The following applies for the rated current: The values have been determined conform to IEC/EN 60947 (switchgear standard) and generally relate to the max. defined cross-sections and are intended for the purpose of orientation.

Terminal capacities Cu strip (number of segments × width × segment thickness) mm	Copper busbar width × thickness mm	**Part no.** Article no. when ordered separately	Std. pack	**Notes**
min.6 × 16 × 0.8 max. (2 ×) 10 × 32 × 1.0		**NZM4-XKB** 266829	1 off	Type contains parts for a terminal located at top or bottom for 3 or 4-pole circuit-breakers. Conversion kit for circuit-breaker with screw connection. Insulation through cover NZM4(-4)-XKSA or phase isolator NZM4(4)-XKP necessary. With switch mpunting on conductive mounting plates use of the shroud NZM4(-4)-XKSA necessary (supplied item).
min.6 × 16 × 0.8 max. (2 ×) 10 × 32 × 1.0		**NZM4-4-XKB** 266831	1 off	
		NZM4-XKA 266836	1 off	Type contains parts for a terminal located at top or bottom for 3 or 4 pole circuit-breakers. A standard with control circuit terminal for 1 × 0.75 … 2.5 mm² (18 … 14 AWG) or 2 × 0.75 … 1.5 mm² (18 … 16 AWG) copper conductors. Can be fitted to circuit-breaker with screw termination Use ferrules with flexible and highly flexible conductors. Max. cross section shown can only be connected when flexible and without ferrules. Use of the NZM4(-4)-XKSA cover obligatory(supplied).
		NZM4-4-XKA 266837	1 off	
(2 ×) 10 × 50 × 1.0	(2 ×) 50 × 10	**NZM4-XKR** 266842	1 off	Type contains parts for a terminal located at top or bottom for 3 or 4-pole circuit-breakers. Can also be retrofitted: NZM4...-XKM... module plate or NZM4-...-XKV... connection width extension
		NZM4-4-XKR 266843	1 off	
			off	
		NZM4-XAS14-1250 283291	1 off	Conversion kit for NZM14 to NZM4. Same connections as NZM14. Part no. contains parts for both sides of switch. 3 connection extensions on outlet side 3 connection extensions on trip block side 1 long shroud for the outlet side Paper drilling template in the assembly instructions (AWA) Cannot be combined with the module plate (NZM4-XKM…), flat cable terminal (NZM4-XKB), connection width extension (NZM4-XKV…), tunnel terminal (NZM4-XKA), connection on rear (NZM4-XKR) and withdrawable unit (NZM4-XAV…).
		NZM4-XAS14-1600 283292	1 off	

		Max. cable connection area	Rated current I_n A	For use with			Part no. Article no. when ordered separately		Std. pack	Notes
Adapter set N(ZM)4/N(ZM)12 not UL/CSA approved										
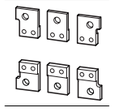	–		max. 1000	N4	3-pole		**N4-XAS12-1000** 285609		1 off	Kit for conversion of N(ZM)12 to N(ZM)4. Using the connection lugs of the exchange kit all 3-pole NZM12 or N12 can be adapted to the connection dimensions of the NZM4 or N4, which have been manufactured since 1983. Non-exchangable are 4-pole base units as well as devices with withdrawable units and remote operators. Scope of the exchange kits N(ZM)4-XAS12...: 3 connection extensions on outlet side 3 connection extensions on trip block side 2 mounting brackets 4 fixing screws 4 phase isolators 6 fixing screws, nuts and washers Paper drilling template in the assembly instructions (AWA) The exchange kits have identical dimensions to the types N(ZM)12..., which correspond to the types manufactured from 02/97 onwards. Special feature: The N(ZM)12-800 manufactured before 02/97 features 10 mm connection lugs instead of the 8 mm connections lugs currently used. With these types the customer must determine the year of manufacture of the device by measuring the thickness of the connection lugs and order the exchange kit N(ZM)4-XAS12-1250. Example: N(ZM)12-800...(1000) > N(ZM)4-XAS12-1000 N(ZM)12-800 vor 02/97 > N(ZM)4-XAS12-1250 N(ZM)12-1250 > N(ZM)4-XAS12-1250 N(ZM)12-1600 > N(ZM)4-XAS12-1600
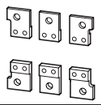	–		max. 1250	N4	3-pole		**N4-XAS12-1250** 285610		1 off	
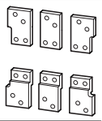	–		max. 1600	N4	3-pole		**N4-XAS12-1600** 285611		1 off	
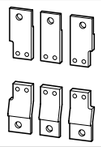	–		max. 1000	NZM4	3-pole		**NZM4-XAS12-1000** 285612		1 off	
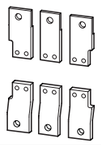	–		max. 1250	NZM4	3-pole		**NZM4-XAS12-1250** 285613		1 off	Expansion for devices manufactured before 1983! The exchange kit for switch-disconnector can be used completely here. The adapters will only fit on top on the circuit-breaker with the longer "ZM" version! The devices are about 65 mm longer at the bottom and the lower connection is about 26 mm lower. Accordingly, the adapters are too short for the bottom and the height does not correspond either.
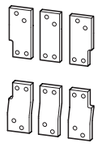	–		max. 1600	NZM4	3-pole		**NZM4-XAS12-1600** 285614		1 off	

	Max. cable connection area	For use with		Terminal capacities Type of conductor	Terminal capacities mm²	AWG/kcmil	Part no. Article no. when ordered separately	Std. pack	Notes
Control circuit terminal									
–		NZM3(-4), PN3, N(S)3(-4)	Three- and four-pole	Screw connection	1 × 0.75 – 2.5 2 × 0.75 – 1.5	1 × 18 – 14 2 × 18 – 16	**NZM3/4-XSTS** 266797	1 off	Type contains parts for two terminal locations located at top or bottom for 3 or 4 pole circuit-breakers. Included as standard with tunnel terminal Degree of protection IP1X Height or thickness of the control circuit terminals NZM-XSTS = 2 mm
Cover									
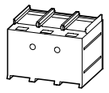 –		NZM4, N(S)4	3 pole				**NZM4-XKSA** 266846	1 off	Type contains parts for a terminal located at top or bottom for3 or 4 pole circuit-breakers. Protection against direct contact where cable lugs, busbars, flat cable terminals or tunnel terminals are used. With module plates, flat braid terminals and tunnel terminals included in the kit. When using insulated conductor material to degree of protection: IP1X.
–		NZM4-4, N4-4	4 pole				**NZM4-4-XKSA** 266847		
Connection cover, knockout									
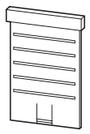 –		NZM4, N(S)4	3 pole				**NZM4-XKSFA** 292193	1 off	Type contains parts for a terminal located at top or bottom for 3 or 4-pole circuit-breakers. Enhancement of the protection against direct contact to (simplified protection against contact with a finger).
–		NZM4-4, N4-4	4 pole				**NZM4-4-XKSFA** 292194		
Phase isolators									
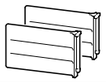 –		NZM4 N(S)4	3 pole				**NZM4-XKP** 281595	1 off	Type contains parts for a terminal located at top or bottom for 3 or 4-pole circuit-breakers. Included with the connection width extension. Cannot be combined with the tunnel terminal NZM4(-4)-XKA, connection NZM4-XKR on rear. Insulation protection where cable lugs, busbars, module plates or flat cable terminals are used.
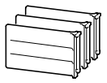 –		NZM4-4, N4-4	4 pole				**NZM4-4-XKP** 281596		
Cable lug									
not UL/CSA approved									
185 mm²		NZM3(-4), PN3, N(S)3(-4) NZM4(-4), N(S)4(-4)	3 and 4 pole				**NZM3-XKS185** 260040	3 off	Type contains a cable lug for 3-pole or 4-pole switches. Special cable lug, narrow style
900 mm²							**NZM3-XKS240** 260041		

http://catalog.moeller.net Moeller HPL0211-2007/2008 NZM4 xEnergy

Circuit-breakers. switch-disconnectors

	For use with	Number of poles	Part no. Article no. when ordered with basic unit	Price see price list	Part no. Article no. when ordered separately	Price see price list	Std. pack	Notes
Plug-in and withdrawable units For circuit-breakers NZM and switch-disconnectors N not UL/CSA approved								
Plug-in adapter elements Complete Only in combination with circuit-breaker								
Terminal screws standard, terminals as accessories								
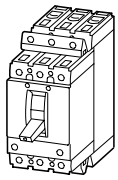	NZM2-4 N2-4	4 pole	**+NZM2-4-XSV** 266698				1 off	$I_{nmax.}$ at: 20 °C: 250 A 40 °C: 230 A (NZM...2-...) 250 A (NZM...2-E...) Mounting position: vertical, 90° right, 90° left Order control circuit plug unit separately!
	NZM2-4 N(S)2-4	3 pole	**+NZM2-XSV** 266697					
Sockets e.g. for reserved slots Retrofit of circuit-breaker with plug-in module.								
Terminal screws standard, terminals as accessories								
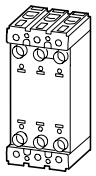	NZM2 N(S)2	3 pole			**NZM2-XSVS** 266699		1 off	
	NZM2-4 N2-4	4 pole			**NZM2-4-XSVS** 266700			
Removable module Fits socket base Only in combination with circuit-breaker								
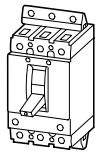	NZM2 N(S)2	3 pole	**+NZM2-XSVE** 266701				1 off	
	NZM2-4 N2-4	4 pole	**+NZM2-4-XSVE** 266702					
Control circuit plug unit								
	NZM2(-4) N(S)2(-4)	for auxiliary contact, shunt/undervoltage release			**NZM2-XSVHI** 266705		1 off	–
	NZM2(-4) N(S)2(-4)	for remote operator			**NZM2-XSVR** 266706			–

	For use with	Number of poles	Part no. Article no. when ordered with basic unit	Price see price list	Part no. Article no. when ordered separately	Price see price list	Std. pack	Notes
Withdrawable unit with control circuit plug unit For circuit-breakers NZM and switch-disconnectors N not UL/CSA approved								
Withdrawable unit with auxiliary plug-in adapter Complete Only in combination with circuit-breaker								
Terminal screws standard, terminals as accessories								
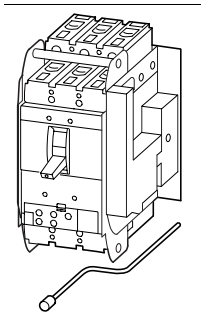	NZM3 N(S)3	3 pole	**+NZM3-XAV** 266707				1 off	$I_{nmax.}$ at: 20 °C: 605 A (NZM3), 1600 A (NZM4) 40 °C: 550 A (NZM3), 1500 A (NZM4) Mounting position NZM3: ertical, 90 ° left NZM4: vertical 3 positions Connected, test, disconnected The 3 positions are indicated mechanically. Additionally, auxiliary contacts are use for remote signalling. An optional M22-(C)K01normally closed contact or M22-(C)K10 normally open contact per position Also see the RMQ-Titan control circuit device range All connections of auxiliary switches (HIA, HIN, HIV) and voltage releases to the control circuit plug units are already present. Cannot be combined with adapter kit NZM4/NZM14 (NZM4-XSAS14-…) or N(ZM)4/N(ZM)12.
	NZM3-4 N3-4	4 pole	**+NZM3-4-XAV** 266708					
	NZM4 N(S)4	3 pole	**+NZM4-XAV** 266709					
	NZM4-4 N4-4	4 pole	**+NZM4-4-XAV** 266710					
Socket base e.g. for reserved slots Retrofit of circuit-breaker with withdrawable carrier.								
Terminal screws standard, terminals as accessories								
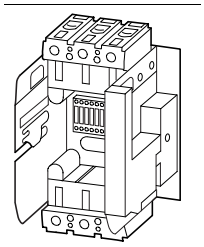	NZM3 N(S)3	3 pole			**NZM3-XAVS** 266711		1 off	
	NZM3-4 N3-4	4 pole			**NZM3-4-XAVS** 266712			
	NZM4 N(S)4	3 pole			**NZM4-XAVS** 266713			
	NZM4-4 N4-4	4 pole			**NZM4-4-XAVS** 266714			
Withdrawable carrier Not UL/CSA approved.								
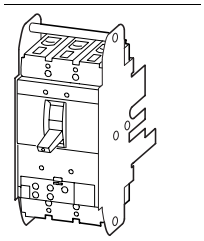	NZM3 N(S)3	3 pole	**+NZM3-XAVE** 266715				1 off	
	NZM3-4 N3-4	4 pole	**+NZM3-4-XAVE** 266716					
	NZM4 N(S)4	3 pole	**+NZM4-XAVE** 266717					
	NZM4-4 N4-4	4 pole	**+NZM4-4-XAVE** 266718					

xEnergy **NZM1, M22-…** Moeller HPL0211-2007/2008 http://catalog.moeller.net

		For use with	Auxiliary contacts: ➔ = safety function, by positive opening to IEC/EN 60947-5-1 N/O = Normally open	N/C = Normally closed	Contact sequence	**Part no.** Article no. when ordered separately	**Price** see price list
Auxiliary contacts							
Standard auxiliary contact Switching with the main contacts Used for indicating and interlocking tasks							
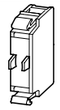		NZM1(-4), 2(-4), 3(-4), 4(-4) PN1(-4), 2(-4), 3(-4) N(S)1(-4), 2(-4), 3(-4), 4(-4)	1 N/O			**M22-K10** 216376	
				1 N/C ➔		**M22-K01** 216378	
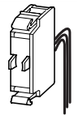	With 3 m connection cable instead of screw termination.	NZM1(-4), 2(-4), 3(-4), 4(-4) PN1(-4), 2(-4), 1(-4) N(S)1(-4), 2(-4), 3(-4), 4(-4)	1 N/O	1 N/C ➔		**NZM-XHI11L**[1)] 266098	
			2 N/O			**NZM-XHI20L**[1)] 266099	
				2 N/C ➔		**NZM-XHI02L**[1)] 266170	
Early-make auxiliary contact For interlocking and load shedding circuits, as well as for early make of the undervoltage release in main switch/Emergency-stop applications							
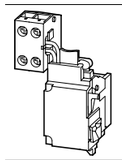	With clamp terminal on the left-hand switch side.	NZM1(-4) PN1(-4) N(S)1(-4)	2 N/O			**NZM1-XHIV** 259426	
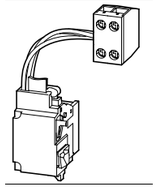	With clamp terminal on the right-hand switch side.		2 N/O			**NZM1-XHIVR** 292195	
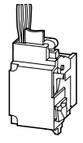	With 3 m connection cable instead of screw termination.		2 N/O			**NZM1-XHIVL** 259432	
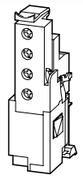		NZM2(-4), 3(-4) PN2(-4), 3(-4) N(S)2(-4), 3(-4)	2 N/O			**NZM2/3-XHIV** 259430	
		NZM4(-4) N(S)4(-4)	2 N/O			**NZM4-XHIV** 266172	
Trip indicating auxiliary contact (HIA), (HIAFI) General trip indication '+', when tripped by voltage release, overload release, short-circuit release or by the residual-current release due to residual-current.							
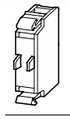		NZM1(-4), 2(-4), 3(-4), 4(-4) N(S)1(-4), 2(-4), 3(-4), 4(-4)	1 N/O			**M22-K10** 216376	
				1 N/C ➔		**M22-K01** 216378	
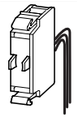	With 3 m connection cable instead of screw termination.	NZM1(-4), 2(-4), 3(-4), 4(-4) N(S)1(-4), 2(-4), 3(-4), 4(-4)	1 N/O	1 N/C ➔		**NZM-XHI11L**[1)] 266098	
			2 N/O			**NZM-XHI20L**[1)] 266099	
				2 N/C ➔		**NZM-XHI02L**[1)] 266170	

http://catalog.moeller.net Moeller HPL0211-2007/2008 **NZM1, M22-…** xEnergy

	Part no. Article no. when ordered separately	**Price** see price list	Std. pack	**Notes**	**Notes**
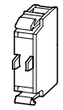	**M22-CK10** 216384		20 off	For Std. pack: M22-(C)K... : Std. pack = 20 off	The following can be clipped into the switches: • NZM1, N(S)1, PN1- one standard auxiliary contact • NZM2, N(S)2, PN2 - up to 2 standard auxiliary contacts M22-(C)K… • NZM3, N(S)3, PN3 and NZM4, N(S)4 - up to 3 standard auxiliary contacts M22-(C)K… Any combinations of the auxiliary contact types ispossible. Marking on switch: HIN
	M22-CK01 216385		20 off		
			20 off	[1)] please inquire	
				[1)] please inquire	
				[1)] please inquire	
			1 off		Not in conjunction with NZM…-XU… undervoltage release or NZM…-XA… shunt release Early make with switch on and switch off (manual actuation): approx. 20 ms
					Not in conjunction with undervoltage release NZM…-XU, shunt release NZM…-XA… or remote operator NZM…-XR… Early make with switch on (manual actuation): approx. 90 ms
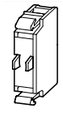	**M22-CK10** 216384		20 off	For Std. pack: M22-(C)K... : Std. pack = 20 off	The following can be clipped into the switches: • NZM1 - one trip-indicating auxiliary switch • NZM2 - one M22-(C)K… trip-indicating auxiliary switch • NZM3 - one M22-(C)K… trip-indicating auxiliary switch • NZM4 - up to two M22-(C)K… trip-indicating auxiliary switches Any combinations of the auxiliary contact types is possible. Not in combination with switch-disconnector PN… Marking on switch: HIA Labeling in FI-Block: HIAFI. If the trip-indicating auxiliary contact in the fault-current block is used, the N/C contacts operates as a N/O contact and the N/C contact operates as an N/O contact (circuit symbol)
	M22-CK01 216385				
				[1)] please inquire	
				[1)] please inquire	
				[1)] please inquire	

	For use with	Rated control voltage U_s V	Part no. Article no. when ordered separately	Price see price list	Std. pack	Notes
Undervoltage releases						
Without auxiliary contact Non-delayed disconnection of NZM circuit-breakers or N switch-disconnectors when the control voltage sinks below 35 – 70% U_S. For use with Emergency-Stop devices in conjunction with Emergency-Stop button.						
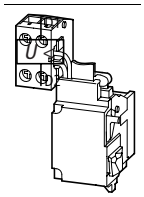	With clamp terminal on the left-hand switch side.	NZM1(-4), N(S)1(-4)	24 V 50/60 Hz	**NZM1-XU24AC** 259434		1 off	When the undervoltage release is de-energized, accidental contact with the main contacts of the switch during attempts to switch on, is safely prevented . Undervoltage release cannot be installed simultaneously with NZM...-XHIV... early-make auxiliary contact or NZM...-XA... shunt release.
			110 V – 130 V 50/60 Hz	**NZM1-XU110-130AC** 259440		
			208 V 240 V 50/60 Hz	**NZM1-XU208-240AC** 259442		
			380 V – 440 V 50/60 Hz	**NZM1-XU380-440AC** 259444		
			480 V – 525 V 50/60 Hz	**NZM1-XU480-525AC** 259446		
			600 V 50/60 Hz	**NZM1-XU600AC** 259448		
			12 V DC	**NZM1-XU12DC** 259450		
			24 V DC	**NZM1-XU24DC** 259452		
			110 V – 130 V DC	**NZM1-XU110-130DC** 259458		
			220 V – 250 V DC	**NZM1-XU220-250DC** 259460		
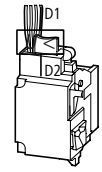	With 3 m connection cable instead of screw termination.	NZM1(-4), N(S)1(-4)	24 V 50/60 Hz	**NZM1-XUL24AC** 259462		1 off
			110 V – 130 V 50/60 Hz	**NZM1-XUL110-130AC** 259468		
			208 V 240 V 50/60 Hz	**NZM1-XUL208-240AC** 259471		
			380 V – 440 V 50/60 Hz	**NZM1-XUL380-440AC** 259473		
			480 V – 525 V 50/60 Hz	**NZM1-XUL480-525AC** 259475		
			600 V 50/60 Hz	**NZM1-XUL600AC** 259477		
			12 V DC	**NZM1-XUL12DC** 259479		
			24 V DC	**NZM1-XUL24DC** 259481		
			110 V 130 V DC	**NZM1-XUL110-130DC** 259487		
			220 V – 250 V DC	**NZM1-XUL220-250DC** 259489		

	For use with	Rated control voltage U_s V	Part no. Article no. when ordered separately	Price see price list	Std. pack	Notes
Undervoltage releases						
Without auxiliary contact Non-delayed disconnection of NZM circuit-breakers or N switch-disconnectors when the control voltage sinks below 35 – 70% U_S. For use with Emergency-Stop devices in conjunction with Emergency-Stop button.						
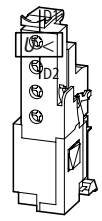	NZM2(-4), N(S)2(-4) NZM3(-4), N(S)3(-4)	24 V 50/60 Hz	**NZM2/3-XU24AC** 259491		1 off	When the undervoltage release is de-energized, accidental contact with the main contacts of the switch during attempts to switch on, is safely prevented . Undervoltage release cannot be installed simultaneously with NZM...-XHIV... early-make auxiliary contact or NZM...-XA... shunt release.
		110 V – 130 V 50/60 Hz	**NZM2/3-XU110-130AC** 259497			
		208 V 240 V 50/60 Hz	**NZM2/3-XU208-240AC** 259499			
		380 V – 440 V 50/60 Hz	**NZM2/3-XU380-440AC** 259501			
		480 V – 525 V 50/60 Hz	**NZM2/3-XU480-525AC** 259503			
		600 V 50/60 Hz	**NZM2/3-XU600AC** 259505			
		12 V DC	**NZM2/3-XU12DC** 259507			
		24 V DC	**NZM2/3-XU24DC** 259509			
		110 V 130 V DC	**NZM2/3-XU110-130DC** 259515			
		220 V – 250 V DC	**NZM2/3-XU220-250DC** 259517			
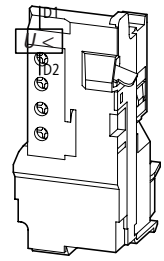	NZM4(-4), N(S)4(-4)	24 V 50/60 Hz	**NZM4-XU24AC** 266189		1 off	
		110 V – 130 V 50/60 Hz	**NZM4-XU110-130AC** 266192			
		208 V – 240 V 50/60 Hz	**NZM4-XU208-240AC** 266193			
		380 V – 440 V 50/60 Hz	**NZM4-XU380-440AC** 266194			
		480 V – 525 V 50/60 Hz	**NZM4-XU480-525AC** 266195			
		600 V 50/60 Hz	**NZM4-XU600AC** 266196			
		12 V DC	**NZM4-XU12DC** 266203			
		24 V DC	**NZM4-XU24DC** 266204			
		110 V – 130 V DC	**NZM4-XU110-130DC** 266207			
		220 V – 250 V DC	**NZM4-XU220-250DC** 266208			

		For use with	Rated control voltage U_s V	Part no. Article no. when ordered separately	Price see price list	Std. pack	Notes
Undervoltage releases							
With two early-make auxiliary contacts For interlocking and load-shedding circuits, as well as for early-make of the undervoltage release in main-switch applications.							
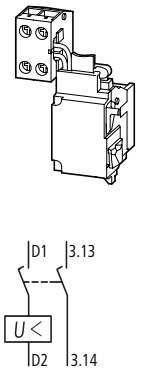	With clamp terminal on the left-hand switch side.	NZM1(-4), N(S)1(-4)	24 V 50/60 Hz	**NZM1-XUHIV24AC** 259531		1 off	When the undervoltage release is de-energized, accidental contact with the main contacts of the switch during attempts to switch on is safely prevented. Early-make of the auxiliary contacts with on and off switching (manual operation): approx. 20 ms. Undervoltage releases cannot be installed simultaneously with NZM...-XHIV... early-make auxiliary contact or NZM...-XA... shunt release.
			110 V – 130 V 50/60 Hz	**NZM1-XUHIV110-130AC** 259537			
			208 V – 240 V 50/60 Hz	**NZM1-XUHIV208-240AC** 259539			
			380 V – 440 V 50/60 Hz	**NZM1-XUHIV380-440AC** 259541			
			480 V – 525 V 50/60 Hz	**NZM1-XUHIV480-525AC** 259543			
			12 V DC	**NZM1-XUHIV12DC** 259545			
			24 V DC	**NZM1-XUHIV24DC** 259547			
			110 V – 130 V DC	**NZM1-XUHIV110-130DC** 259553			
			220 V – 250 V DC	**NZM1-XUHIV220-250DC** 259555			
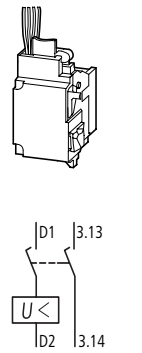	With 3 m connection cable instead of screw termination.	NZM1(-4), N(S)1(-4)	24 V 50/60 Hz	**NZM1-XUHIVL24AC** 259557		1 off	
			110 V – 130 V 50/60 Hz	**NZM1-XUHIVL110-130AC** 259563			
			208 V – 240 V 50/60 Hz	**NZM1-XUHIVL208-240AC** 259565			
			380 V – 440 V 50/60 Hz	**NZM1-XUHIVL380-440AC** 259567			
			480 V – 525 V 50/60 Hz	**NZM1-XUHIVL480-525AC** 259569			
			12 V DC	**NZM1-XUHIVL12DC** 259571			
			24 V DC	**NZM1-XUHIVL24DC** 259573			
			110 V – 130 V DC	**NZM1-XUHIVL110-130DC** 259579			
			220 V – 250 V DC	**NZM1-XUHIVL220-250DC** 259581			
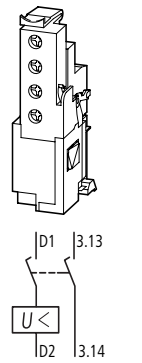		NZM2(-4), N(S)2(-4) NZM3(-4), N(S)3(-4)	24 V 50/60 Hz	**NZM2/3-XUHIV24AC** 259583		1 off	When the undervoltage release is de-energized, accidental contact with the main contacts of the switch during attempts to switch on is safely prevented. Early-make of the auxiliary contacts with on and off switching (manual operation): approx. 20 ms. Cannot be used in conjunction with NZM...-XR... remote operator. Undervoltage releases cannot be installed simultaneously with NZM...-XHIV... early-make auxiliary contact or NZM...-XA... shunt release.
			110 V – 130 V 50/60 Hz	**NZM2/3-XUHIV110-130AC** 259589			
			208 V – 240 V 50/60 Hz	**NZM2/3-XUHIV208-240AC** 259591			
			380 V – 440 V 50/60 Hz	**NZM2/3-XUHIV380-440AC** 259594			
			480 V – 525 V 50/60 Hz	**NZM2/3-XUHIV480-525AC** 259598			
			12 V DC	**NZM2/3-XUHIV12DC** 259600			
			24 V DC	**NZM2/3-XUHIV24DC** 259602			
			110 V – 130 V DC	**NZM2/3-XUHIV110-130DC** 259608			
			220 V – 250 V DC	**NZM2/3-XUHIV220-250DC** 259610			

	For use with	Rated control voltage U_s V	Part no. Article no. when ordered separately	Price see price list	Std. pack	Notes
Undervoltage releases						
With two early-make auxiliary contacts						
For interlocking and load-shedding circuits, as well as for early-make of the undervoltage release in main-switch applications.						
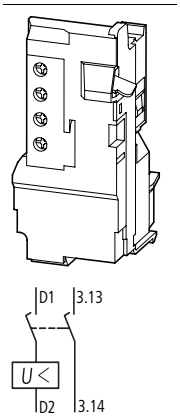	NZM4(-4), N(S)4(-4)	24 V 50/60 Hz	**NZM4-XUHIV24AC** 266217		1 off	When the undervoltage release is de-energized, accidental contact with the main switches of the switch during attempts to switch on is safely prevented. Early-make of the auxiliary contacts with switch on (manual operation): approx. 90 ms. Cannot be used in conjunction with NZM...-XR... remote operator. Undervoltage releases cannot be installed simultaneously with NZM...-XHIV... early-make auxiliary contact or NZM...-XA... shunt release.
		110 V – 130 V 50/60 Hz	**NZM4-XUHIV110-130AC** 266220			
		208 V – 240 V 50/60 Hz	**NZM4-XUHIV208-240AC** 266221			
		380 V – 440 V 50/60 Hz	**NZM4-XUHIV380-440AC** 266222			
		480 V – 525 V 50/60 Hz	**NZM4-XUHIV480-525AC** 266223			
		12 V DC	**NZM4-XUHIV12DC** 266231			
		24 V DC	**NZM4-XUHIV24DC** 266232			
		110 V – 130 V DC	**NZM4-XUHIV110-130DC** 266235			
		220 V – 250 V DC	**NZM4-XUHIV220-250DC** 266236			

	For use with	Rated control voltage U_s V	Part no. Article no. when ordered separately	Price see price list	Std. pack
Undervoltage releases					
With two separate early-make auxiliary contacts					
With 3 m connection cable instead of screw termination.					
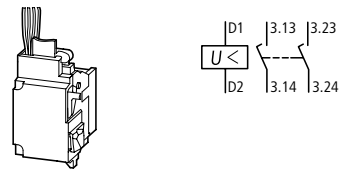	NZM1(-4), N(S)1(-4)	24 V 50/60 Hz	**NZM1-XUHIV20L24AC** 259612		1 off
		110 V – 130 V 50/60 Hz	**NZM1-XUHIV20L110-130AC** 259620		
		208 V – 240 V 50/60 Hz	**NZM1-XUHIV20L208-240AC** 259622		
		380 V – 440 V 50/60 Hz	**NZM1-XUHIV20L380-440AC** 259624		
		24 V DC	**NZM1-XUHIV20L24DC** 259630		
Contacts 3.23 and 3.24 with separate 3 m connection cables.					
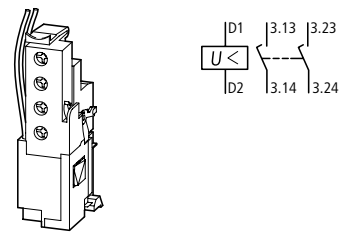	NZM2(-4), N(S)2(-4) NZM3(-4), N(S)3(-4)	24 V 50/60 Hz	**NZM2/3-XUHIV2024AC** 259640		1 off
		110 V – 130 V 50/60 Hz	**NZM2/3-XUHIV20110-130AC** 259648		
		208 V – 240 V 50/60 Hz	**NZM2/3-XUHIV20208-240AC** 259651		
		380 V – 440 V 50/60 Hz	**NZM2/3-XUHIV20380-440AC** 259653		
		24 V DC	**NZM2/3-XUHIV2024DC** 259659		

Notes

When the undervoltage release is de-energized, accidental contact with the main switches of the switch during attempts to switch on is safely prevented.
Early-make of the auxiliary contacts with on and off switching (manual operation): approx. 20 ms.
Cannot be used in conjunction with NZM...-XR... remote operator.
Undervoltage releases cannot be installed simultaneously with NZM...-XHIV... early-make auxiliary contact or NZM...-XA... shunt release.

		For use with	Rated control voltage U_s V	**Part no.** Article no. when ordered separately	**Price** see price list	Std. pack
Undervoltage releases						
With two separate early-make auxiliary contacts						
Coil connection wired to clamp terminal, auxiliary switch connections wired with 3 m loose connection cables						
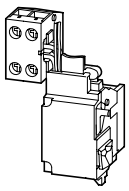	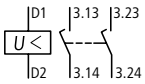	NZM1(-4), N(S)1(-4)	24 V 50/60 Hz	**NZM1-XUHIV20KL24AC** 284388		1 off
			110 V – 130 V 50/60 Hz	**NZM1-XUHIV20KL110-130AC** 284389		
			208 V – 240 V 50/60 Hz	**NZM1-XUHIV20KL208-240AC** 284400		
			24 V DC	**NZM1-XUHIV20KL24DC** 284387		
Coil connection with 3 m loose connection cables, auxiliary switch connections wired to clamp terminal						
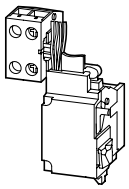	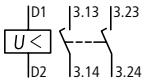	NZM1(-4), N(S)1(-4)	24 V 50/60 Hz	**NZM1-XUHIV20LK24AC** 284402		1 off
			110 V – 130 V 50/60 Hz	**NZM1-XUHIV20LK110-130AC** 284403		
			208 V … 240 V 50/60 Hz	**NZM1-XUHIV20LK208-240AC** 284404		
			24 V DC	**NZM1-XUHIV20LK24DC** 284401		
Coil connection with 3 m loose connection cables, auxiliary switch connections wired to clamp terminal						
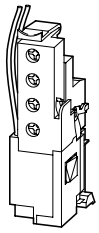	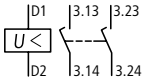	NZM2(-4), N(S)2(-4) NZM3(-4), N(S)3(-4)	24 V 50/60 Hz	**NZM2/3-XUHIV20LK24AC** 285291		1 off
			110 V – 130 V 50/60 Hz	**NZM2/3-XUHIV20LK110-130AC** 284407		
			208 V – 240 V 50/60 Hz	**NZM2/3-XUHIV20LK208-240AC** 284408		
			24 V DC	**NZM2/3-XUHIV20LK24DC** 284405		
Contacts 3.23 and 3.24 with separate 3 m connection cables.						
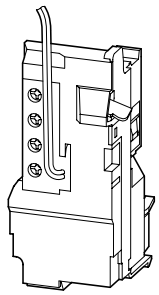	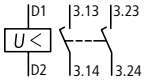	NZM4(-4), N(S)4(-4)	24 V 50/60 Hz	**NZM4-XUHIV2024AC** 266244		1 off
			110 V – 130 V 50/60 Hz	**NZM4-XUHIV20110-130AC** 266247		
			208 V 240 V 50/60 Hz	**NZM4-XUHIV20208-240AC** 266248		
			380 V – 440 V 50/60 Hz	**NZM4-XUHIV20380-440AC** 266249		
			24 V DC	**NZM4-XUHIV2024DC** 266258		

Notes

When the undervoltage release is de-energized, accidental contact with the main switches of the switch during attempts to switch on is safely prevented.
Early-make of the auxiliary contacts with on and off switching (manual operation): approx. 20 ms.
Cannot be used in conjunction with NZM...-XR... remote operator.
Undervoltage releases cannot be installed simultaneously with NZM...-XHIV... early-make auxiliary contact or NZM...-XA... shunt release.

	For use with	Part no. Article no. when ordered separately	Price see price list	Std. pack	Notes
Undervoltage releases, off-delayed					
Combination of separate delay unit and special tripping device. Not UL/CSA approved.					
Delay unit Voltage dips of less than the setting between 0.06 – 16 s do not cause disconnection of the NZM circuit-breaker or N switch-disconnector.					
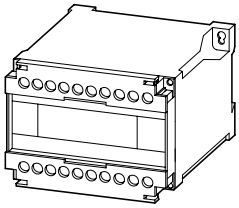	NZM1(-4), 2(-4), 3(-4), 4(-4) N(S)1(-4), 2(-4), 3(-4), 4(-4) 50/60 Hz 220 V – 240 V 380 V – 440 V 480 V – 550 V DC/AC 24 V	**UVU-NZM** 260154		1 off	Adjustable delay time 70 ms – 4 s. With additional capacitor up to 16 s. A special tripping device is required. Cannot be installed simultaneously with NZM...-XHIV... or NZM...-XA... shunt release. Delay unit for separate installation (Fixing: top-hat rail or screws). For other operating voltages use control transformer.
Special tripping device For combination with separate delay unit					
Without auxiliary contacts					
NZM1 with 3 m separate connection cables instead of screw terminal, NZM2, 3 , 4 with screw terminal					
	NZM1(-4) N(S)1(-4)	**NZM1-XUVL** 271607		1 off	UVU-NZM delay unit is additionally required. Cannot be installed simultaneously with separate NZM...-XHIV early-make auxiliary contact or NZM...-XA... shunt release.
	NZM2(-4), N(S)2(-4) NZM3(-4), N(S)3(-4)	**NZM2/3-XUV** 259527			
	NZM4(-4) N(S)4(-4)	**NZM4-XUV** 266588			
With 2 early-make auxiliary contacts					
NZM1 with 3 m separate connection cables instead of screw terminal, NZM2, 3 , 4 with screw terminal					
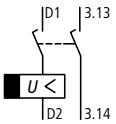	NZM1(-4) N(S)1(-4)	**NZM1-XUVHIVL** 271608		1 off	Cannot be used in conjunction with NZM...-XR... remote operator. UVU-NZM delay unit is additionally required. Cannot be installed simultaneously with separate NZM...-XHIV early-make auxiliary contact or NZM...-XA... shunt release. NZM1, 2, 3: Early-make of the auxiliary contacts with on and off switching (manual operation): approx. 20 ms. NZM4: Early-make of the auxiliary contacts with switch on (manual operation): approx. 90 ms.
	NZM2(-4), N(S)2(-4) NZM3(-4), N(S)3(-4)	**NZM2/3-XUVHIV** 259684			
	NZM4(-4) N(S)4(-4)	**NZM4-XUVHIV** 266596			
With 2 separately operating early-make auxiliary contacts					
NZM1 with 3 m separate connection cables instead of screw terminal, NZM2, 3, 4 with screw terminal, contact 3.23 and 3.24 with 3 m separate connection cables.					
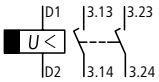	NZM1(-4) N(S)1(-4)	**NZM1-XUVHIV20L** 271609		1 off	Cannot be used in conjunction with NZM...-XR... remote operator. UVU-NZM delay unit is additionally required. Cannot be installed simultaneously with separate NZM...-XHIV early-make auxiliary contact or NZM...-XA... shunt release. NZM1, 2, 3: Early-make of the auxiliary contacts with on and off switching (manual operation): approx. 20 ms. NZM4: Early-make of the auxiliary contacts with switch on (manual operation): approx. 90 ms.
	NZM2(-4), N(S)2(-4) NZM3(-4), N(S)3(-4)	**NZM2/3-XUVHIV20** 259688			
	NZM4(-4) N(S)4(-4)	**NZM4-XUVHIV20** 266604			

		For use with	Rated control voltage U_s V	with screw terminals **Part no.** Article no. when ordered separately	**Price** see price list	Std. pack	**Notes**
Shunt releases							
Without auxiliary contact Switches are tripped by a voltage pulse or by the application of uninterrupted voltage.							
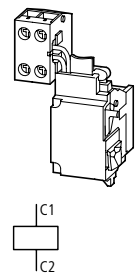	With clamp terminal on the left-hand switch side.	NZM1(-4), N(S)1(-4)	12 V AC/DC	**NZM1-XA12AC/DC** 259706		1 off	When the undervoltage release is de-energized, accidental contact with the main contacts of the switch during attempts to switch on, is safely prevented. Shunt release cannot be installed simultaneously with NZM...-XHIV... early-make auxiliary contact or NZM...-XU... undervoltage release.
			24 V AC/DC	**NZM1-XA24AC/DC** 259708			
			110 V – 130 V AC/DC	**NZM1-XA110-130AC/DC** 259724			
			208 V – 250 V AC/DC	**NZM1-XA208-250AC/DC** 259726			
			380 V – 440 V AC/DC	**NZM1-XA380-440AC/DC** 259728			
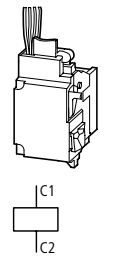	With 3 m connection cable instead of screw termination.	NZM1(-4), N(S)1(-4)	12 V AC/DC	**NZM1-XAL12AC/DC** 259734		1 off	
			24 V AC/DC	**NZM1-XAL24AC/DC** 259736			
			110 V – 130 V AC/DC	**NZM1-XAL110-130AC/DC** 259742			
			208 V – 250 V AC/DC	**NZM1-XAL208-250AC/DC** 259744			
			380 V – 440 V AC/DC	**NZM1-XAL380-440AC/DC** 259746			
Without auxiliary contact Switches are tripped by a voltage pulse or by the application of uninterrupted voltage.							
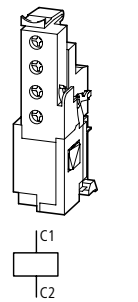		NZM2(-4), N(S)2(-4) NZM3(-4), N(S)3(-4)	12 V AC/DC	**NZM2/3-XA12AC/DC** 259752		1 off	When the undervoltage release is de-energized, accidental contact with the main contacts of the switch during attempts to switch on, is safely prevented. Shunt release cannot be installed simultaneously with NZM...-XHIV... early-make auxiliary contact or NZM...-XU... undervoltage release.
			24 V AC/DC	**NZM2/3-XA24AC/DC** 259754			
			110 V – 130 V AC/DC	**NZM2/3-XA110-130AC/DC** 259760			
			208 V – 250 V AC/DC	**NZM2/3-XA208-250AC/DC** 259763			
			380 V – 440 V AC/DC	**NZM2/3-XA380-440AC/DC** 259766			
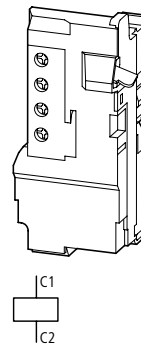		NZM4(-4), N(S)4(-4)	12 V AC/DC	**NZM4-XA12AC/DC** 266446		1 off	
			24 V AC/DC	**NZM4-XA24AC/DC** 266447			
			110 V – 130 V AC/DC	**NZM4-XA110-130AC/DC** 266450			
			208 V – 250 V AC/DC	**NZM4-XA208-250AC/DC** 266451			
			380 V – 440 V AC/DC	**NZM4-XA380-440AC/DC** 266452			

	For use with	Part no. Article no. when ordered separately with screw terminals	Price see price list	Std. pack	Notes
Shunt releases					
Capacitor unit 230 V 50/60 Hz in conjunction with NZM...-XA2082-50AC/DC shunt release Enclosure: degree of protection IP20 not UL/CSA approved					
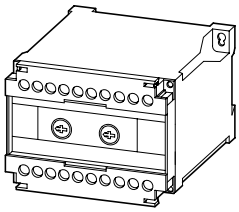	NZM1(-4), N(S)1(-4) NZM2(-4), N(S)2(-4) NZM3(-4), N(S)3(-4) NZM4(-4), N(S)4(-4)	**NZM-XCM** 229413		1 off	Enables the safe use of circuit-breakers as mesh network circuit-breakers in the range from 0 … 110 % U_n with constant switch-off time of 40 ms. If the mains voltage is absent, the installed capacitor supplies power for actuating the shunt release for at least 12 hours. The configuration of the capacitor unit is undertaken independently of the circuit-breaker. Connect NZM-XCM to the power feed side. Design note: Connect a standard auxiliary contact as N/O in series with the shunt release! Standard auxiliary contact not included as standard.

		For use with	Rated control voltage U_s V	Part no. Article no. when ordered separately with screw terminals	Price see price list	Std. pack	Notes
Shunt releases							
Without auxiliary contacts For mesh-network circuit-breakers For intermittent operation Maximum on time = 1 s Operating range 10 – 110 % U_s not UL/CSA approved							
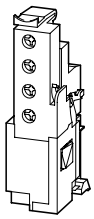		NZM3(-4), N(S)3(-4)	230 V AC	**NZM3-XA-230AC-MNS** 274097		1 off	Cannot be installed simultaneously with NZM...-XHIV... early-make auxiliary contact or NZM...-XU... undervoltage release. Intermittent operation guaranteed by series connection of an M22-(C)K10 make contact. The maximum operating time of the shunt release for mesh network circuit-breaker is 1 s.
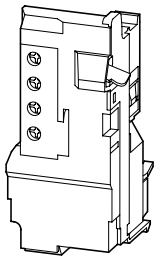		NZM4(-4), N(S)4(-4)	230 V AC	**NZM4-XA-230AC-MNS** 274138		1 off	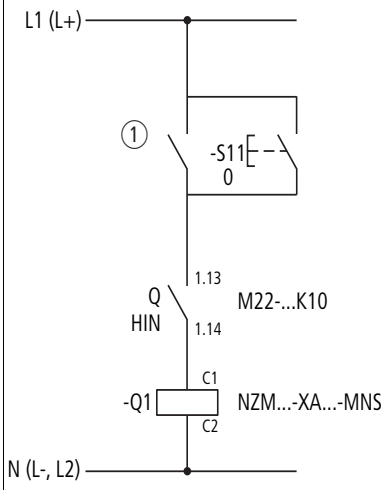

1	Reverse-power relay contact
-S11	Remote off
Q	Standard auxiliary contact
-Q1	Shunt release

	For use with	Rated control voltage U_s V	with screw terminals **Part no.** Article no. when ordered separately	**Price** see price list	Std. pack	**Notes**
Shunt releases						
With early-make auxiliary contact Not in combination with remote operator.						
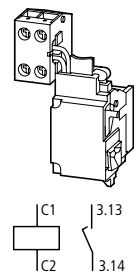 With clamp terminal on the left-hand switch side.	NZM1(-4), N(S)1(-4)	12 V AC/DC	**NZM1-XAHIV12AC/DC** 259772		1 off	When the shunt release is energized, accidental contact with the main contacts of the switch during attempts to switch on is safely prevented. Early-make of the auxiliary contact with on and off switching (manual operation): approx. 20 ms. Shunt release cannot be installed simultaneously with NZM...-XHIV.. early-make auxiliary contact or NZM...-XU... undervoltage release.
		24 V AC/DC	**NZM1-XAHIV24AC/DC** 259774			
		110 V – 130 V AC/DC	**NZM1-XAHIV110-130AC/DC** 259780			
		208 V – 250 V AC/DC	**NZM1-XAHIV208-250AC/DC** 259782			
		380 V – 440 V AC/DC	**NZM1-XAHIV380-440AC/DC** 259784			
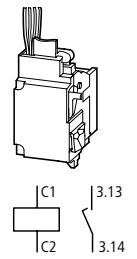 With 3 m connection cable instead of screw termination.	NZM1(-4), N(S)1(-4)	12 V AC/DC	**NZM1-XAHIVL12AC/DC** 259790		1 off	
		24 V AC/DC	**NZM1-XAHIVL24AC/DC** 259792			
		110 V – 130 V AC/DC	**NZM1-XAHIVL110-130AC/DC** 259798			
		208 V – 250 V AC/DC	**NZM1-XAHIVL208-250AC/DC** 259800			
		380 V – 440 V AC/DC	**NZM1-XAHIVL380-440AC/DC** 259802			
With early-make auxiliary contact						
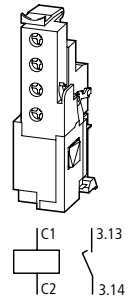	NZM2(-4), N(S)2(-4) NZM3(-4), N(S)3(-4)	12 V AC/DC	**NZM2/3-XAHIV12AC/DC** 259808		1 off	When the shunt release is energized, accidental contact with the main contacts of the switch during attempts to switch on is safely prevented. Early-make of the auxiliary contact with on and off switching (manual operation): approx. 20 ms. Cannot be used in conjunction with NZM...-XR... remote operator. Shunt release cannot be installed simultaneously with NZM...-XHIV.. early-make auxiliary contact or NZM...-XU... undervoltage release.
		24 V AC/DC	**NZM2/3-XAHIV24AC/DC** 259810			
		110 V – 130 V AC/DC	**NZM2/3-XAHIV110-130AC/DC** 259816			
		208 V – 250 V AC/DC	**NZM2/3-XAHIV208-250AC/DC** 259818			
		380 V – 440 V AC/DC	**NZM2/3-XAHIV380-440AC/DC** 259820			
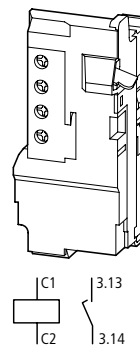	NZM4(-4), N(S)4(-4)	12 V AC/DC	**NZM4-XAHIV12AC/DC** 266470		1 off	
		24 V AC/DC	**NZM4-XAHIV24AC/DC** 266471			
		110 V – 130 V AC/DC	**NZM4-XAHIV110-130AC/DC** 266474			
		208 V – 250 V AC/DC	**NZM4-XAHIV208-250AC/DC** 266475			
		380 V – 440 V AC/DC	**NZM4-XAHIV380-440AC/DC** 266476			

			For use with	Rated control voltage U_s V	with screw terminals **Part no.** Article no. when ordered separately	**Price** see price list	Std. pack
Shunt releases							
For mesh-network circuit-breakers For intermittent operation Maximum on time = 1 s Operating range 10 – 110 % U_s not UL/CSA approved							
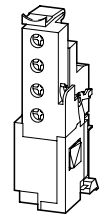	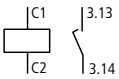	With early-make auxiliary contact	NZM3(-4), N(S)3(-4)	230 V AC	**NZM3-XAHIV-230AC-MNS** 274141		1 off
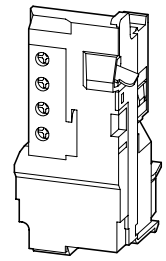	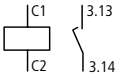			230 V AC	**NZM4-XAHIV-230AC-MNS** 274143		1 off

Notes

Cannot be installed simultaneously with NZM...-XHIV... early-make auxiliary contact or NZM...-XU... undervoltage release.
Cannot be used in conjunction with NZM...-XR... remote operator.

Intermittent operation guaranteed by series connection of a N/O contact M22-(C)K10 (standard auxiliary contact).
The maximum operating time of the shunt release for mesh network circuit-breaker is 1 s.
NZM3: Early-make of the auxiliary contact with on and off switching (manual operation): approx. 20 ms.
NZM4: Early-make of the auxiliary contact with switch on (manual operation): approx. 90 ms.

		For use with	Part no. Article no.	Price see price list	Std. pack	Notes
Door coupling rotary handle						
Complete including rotary drive and coupling parts An additional extension shaft is necessary with the NZM...-XT(V)D(V)(R)(-60) types. Degree of protection IP66/UL/CSA Type 4X						
Standard, black/grey						
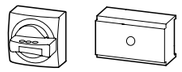	Lockable on the 0 position on the handle using up to 3 padlocks. With door interlock	NZM1(-4), PN1(-4), N(S)1(-4)	**NZM1-XTVD** 260166		1 off	Door interlock • Not defeated in the locked OFF and ON positions • Can be modified such that it can be defeated from the outside using a screwdriver, when it is in the unlocked ON position. • Door can be opened in OFF NZM...-XTVD(V) • External warning plate/ designation label can be clipped on
		NZM2(-4), PN2(-4), N(S)2(-4)	**NZM2-XTVD** 260168			
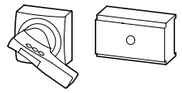		NZM3(-4), PN3(-4), N(S)3(-4)	**NZM3-XTVD** 260170			
		NZM4(-4), N(S)4(-4)	**NZM4-XTVD** 266614			
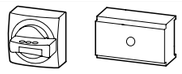	Lockable on the handle on the switch using up to 3 padlocks. Can be locked in 0 position on the handle, with adequate modification also in I position. With door interlock. Lockable in the 0 position	NZM1(-4), PN1(-4), N(S)1(-4)	**NZM1-XTVDV** 260172			
		NZM2(-4), PN2(-4), N(S)2(-4)	**NZM2-XTVDV** 260174			
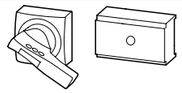		NZM3(-4), PN3(-4), N(S)3(-4)	**NZM3-XTVDV** 260176			
		NZM4(-4), N(S)4(-4)	**NZM4-XTVDV** 266616			
Red-yellow for Emergency-Stop						
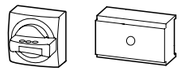	Lockable on the handle on the switch using up to 3 padlocks. Lockable in 0 position on handle. With door interlock. Lockable in the 0 position	NZM1(-4), PN1(-4), N(S)1(-4)	**NZM1-XTVDVR** 260178		1 off	Door interlock • Not defeatable in the locked OFF position. • Can be modified such that it can be defeated from the outside using a screwdriver, when it is in the unlocked ON position. • Door can be opened in OFF NZM...-XTVDVR • External warning plate/ designation label can be clipped on
		NZM2(-4), PN2(-4), N(S)2(-4)	**NZM2-XTVDVR** 260180			
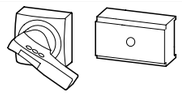		NZM3(-4), PN3(-4), N(S)3(-4)	**NZM3-XTVDVR** 260182			
		NZM4(-4), N(S)4(-4)	**NZM4-XTVDVR** 266618			
Extension shaft						
	Max. mounting depth: 400 mm	NZM1(-4), PN1(-4), N(S)1(-4) NZM2(-4), PN2(-4), N(S)2(-4)	**NZM1/2-XV4** 261232		1 off	Can be cut to required length
		NZM3(-4), PN3(-4), N(S)3(-4) NZM4(-4), N(S)4(-4)	**NZM3/4-XV4** 261234			
	Max. mounting depth: 600 mm	NZM1(-4), PN1(-4), N(S)1(-4) NZM2(-4), PN2(-4), N(S)2(-4)	**NZM1/2-XV6** 260191			
		NZM3(-4), PN3(-4), N(S)3(-4) NZM4(-4), N(S)4(-4)	**NZM3/4-XV6** 260193			

Notes Circuit-breaker can also be installed in a lying position 90 ° left/right, with the handle still in the same position.

For a max. shaft length of 60 mm Part no. Article no.	Price see price list	Std. pack	Notes	Extremely narrow fittings Part no. Article no.	Price see price list	Std. pack	Notes
NZM1-XTVD-60 271504		1 off	Door interlock • Not defeated in the locked OFF and ON positions • Can be modified such that it can be defeated from the outside using a screwdriver, when it is in the unlocked ON position. • Door can be opened in OFF NZM...-XTVD(V)-60 • For maximum shaft length 60 mm • Without shaft support • Cannot be combined with NZM...-XDZ additional handle • External warning plate/ designation label can be clipped on	**NZM1-XTVD-0** 279392		1 off	Door interlock • Not defeated in the locked OFF and ON positions • Can be modified such that it can be defeated from the outside using a screwdriver, when it is in the unlocked ON position. • Door can be opened in OFF NZM...-XTVD(V)-0 • For extremely narrow fittings • With special short extension shaft • Cannot be combined with NZM...-XDZ additional handle • External warning plate/ designation label can be clipped on
NZM2-XTVD-60 271505				**NZM2-XTVD-0** 279393			
NZM3-XTVD-60 271506				**NZM3-XTVD-0** 279394			
NZM4-XTVD-60 271507				**NZM4-XTVD-0** 279395			
NZM1-XTVDV-60 271508				**NZM1-XTVDV-0** 279396			
NZM2-XTVDV-60 271509				**NZM2-XTVDV-0** 279397			
NZM3-XTVDV-60 271510				**NZM3-XTVDV-0** 279398			
NZM4-XTVDV-60 271511				**NZM4-XTVDV-0** 279399			
NZM1-XTVDVR-60 271512		1 off	Door interlock • Not defeatable in the locked OFF position. • Can be modified such that it can be defeated from the outside using a screwdriver, when it is in the unlocked ON position. • Door can be opened in OFF NZM...-XTVDVR-60 • For maximum shaft length 60 mm • Without shaft support • Cannot be combined with NZM...-XDZ additional handle • External warning plate/ designation label can be clipped on	**NZM1-XTVDVR-0** 279400		1 off	Door interlock • Not defeatable in the locked OFF position. • Can be modified such that it can be defeated from the outside using a screwdriver, when it is in the unlocked ON position. • Door can be opened in OFF NZM...-XTVDVR-0 • For extremely narrow fittings • With special short extension shaft • Cannot be combined with NZM...-XDZ additional handle • External warning plate/ designation label can be clipped on
NZM2-XTVDVR-60 271513				**NZM2-XTVDVR-0** 279401			
NZM3-XTVDVR-60 271514				**NZM3-XTVDVR-0** 279402			
NZM4-XTVDVR-60 271515				**NZM4-XTVDVR-0** 279403			

NZM1, NZM2, NZM3, NZM4

Divergent to normal IEC handles: Door opening only possible with active rotation beyond the 0 position.		For use with	Standard **Part no.** Article no. when ordered separately	**Price** see price list	Std. pack	**Notes**
Door coupling rotary handle						
Complete including rotary drive and coupling parts Extension shaft additionally required. Degree of protection IP66/UL/CSA Type 4X						
Standard, black/grey						
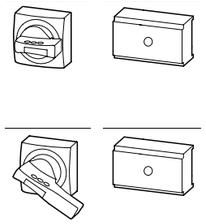	Lockable on the handle and switch using up to 3 padlocks. Lockable in 0 position on handle. With door interlock. Lockable on the switch in the 0 position.	NZM1, N(S)1	**NZM1-XTVDV-NA** 100683		1 off	Door interlock • **Not** defeated in the locked OFF position. • Door opening possible with active rotation beyond the 0 position. Can be defeated from the outside using a screwdriver. • Cannot be combined with mechanical interlock • External warning plate/ designation label can be clipped on
		NZM2, N(S)2	**NZM2-XTVDV-NA** 100684			
		NZM3, N(S)3	**NZM3-XTVDV-NA** 100685			
		NZM4, N(S)4	**NZM4-XTVDV-NA** 100686			
Red-yellow for Emergency-Stop						
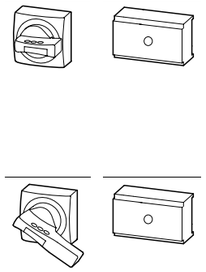	Lockable on the handle and switch using up to 3 padlocks. Lockable in 0 position on handle. With door interlock. Lockable on the switch in the 0 position.	NZM1, N(S)1	**NZM1-XTVDVR-NA** 271449		1 off	Door interlock • Not defeated in the locked OFF position • Door opening possible with active rotation beyond the 0 position. • Cannot be combinedwith mechanical interlock • External warning plate/ designation label can be clipped on
		NZM2, N(S)2	**NZM2-XTVDVR-NA** 271450			
		NZM3, N(S)3	**NZM3-XTVDVR-NA** 271451			
		NZM4, N(S)4	**NZM4-XTVDVR-NA** 271452			
Extension shaft						
	Max. mounting depth: 400 mm	NZM1(-4), PN1(-4), N(S)1(-4) NZM2(-4), PN2(-4), N(S)2(-4)	**NZM1/2-XV4** 261232		1 off	Can be cut to required length
		NZM3(-4), PN3(-4), N(S)3(-4) NZM4(-4), N(S)4(-4)	**NZM3/4-XV4** 261234			
	Max. mounting depth: 600 mm	NZM1(-4), PN1(-4), N(S)1(-4) NZM2(-4), PN2(-4), N(S)2(-4)	**NZM1/2-XV6** 260191			
		NZM3(-4), PN3(-4), N(S)3(-4) NZM4(-4), N(S)4(-4)	**NZM3/4-XV6** 260193			

Notes Circuit-breaker can also be installed in a lying position 90 ° left/right, with the handle still in the same position.

NZM1, NZM2, NZM3, NZM4

For a max. shaft length of 60 mm **Part no.** Article no. when ordered separately	**Price** see price list	**Notes**	Extremely narrow fittings **Part no.** Article no. when ordered separately	**Price** see price list	Std. pack	**Notes**
NZM1-XTVDV-60-NA 100667		Door interlock • **Not** defeated in the locked OFF position. • Door opening possible with active rotation beyond the 0 position. Can be defeated from the outside using a screwdriver. • Cannot be combined with mechanical interlock • External warning plate/ designation label can be clipped on NZM…-XTVDV-60-NA • For a maximum shaft length of60 mm • Without shaft support • Cannot be combined with NZM…-XDZ additional handle • External warning plate/ designation label can be clipped on	**NZM1-XTVDV-0-NA** 100675		1 off	Door interlock • **Not** defeated in the locked OFF position. • Door opening possible with active rotation beyond the 0 position. Can be defeated from the outside using a screwdriver. • Cannot be combined with mechanical interlock • External warning plate/ designation label can be clipped on NZM…-XTVDV-0-NA • For extremely narrow fittings • With special short extension shaft • Cannot be combined with NZM…-XDZ additional handle. • External warning plate/ designation label can be clipped on
NZM2-XTVDV-60-NA 100668			**NZM2-XTVDV-0-NA** 100676			
NZM3-XTVDV-60-NA 100669			**NZM3-XTVDV-0-NA** 100677			
NZM4-XTVDV-60-NA 100670			**NZM4-XTVDV-0-NA** 100678			
NZM1-XTVDVR-60-NA 100671		Door interlock • Not defeated in the locked OFF position • Door opening possible with active rotation beyond the 0 position. • Cannot be combined with mechanical interlock • External warning plate/ designation label can be clipped on NZM...-XTVDVR-60-NA • For a maximum shaft length of 60 mm • Without shaft support • Cannot be combined with NZM...-XDZ additional handle • External warning plate/ designation label can be clipped on	**NZM1-XTVDVR-0-NA** 100679		1 off	Door interlock • Not defeated in the locked OFF position • Door opening possible with active rotation beyond the 0 position. • Cannot be combined with mechanical interlock • External warning plate/ designation label can be clipped on NZM...-XTVDVR-0-NA • For extremely narrow fittings • With special short extension shaft • Cannot be combined with NZM...-XDZ additional handle • External warning plate/ designation label can be clipped on
NZM2-XTVDVR-60-NA 100672			**NZM2-XTVDVR-0-NA** 100680			
NZM3-XTVDVR-60-NA 100673			**NZM3-XTVDVR-0-NA** 100681			
NZM4-XTVDVR-60-NA 100674			**NZM4-XTVDVR-0-NA** 100682			

		For use with	**Part no.** Article no. when ordered separately	**Price** see price list	Std. pack	**Notes**
Rotary handle on circuit-breaker						
Complete with rotary drive						
Standard, black/grey						
	Lockable on the 0 position on the switch using up to 3 padlocks.	NZM1(-4), PN1(-4), N(S)1(-4)	**NZM1-XDV** 260125		1 off	NZM1, 2, 3: Can also be combined with insulating surround. MODAN handle position detection by wire release can be retrofitted.
		NZM2(-4), PN2(-4), N(S)2(-4)	**NZM2-XDV** 260127			
		NZM3(-4), PN3(-4), N(S)3(-4)	**NZM3-XDV** 260129			
		NZM4(-4), N(S)4(-4)	**NZM4-XDV** 266608			
	Lockable on the 0 position on the handle using up to 3 padlocks.	NZM1(-4), PN1(-4), N(S)1(-4)	**NZM1-XDVG** 285247		1 off	Can also be combined with insulating surround.
		NZM2(-4), PN2(-4), N(S)2(-4)	**NZM2-XDVG** 285248			
Red-yellow for Emergency-Stop						
	Lockable on the 0 position on the switch using up to 3 padlocks.	NZM1(-4), PN1(-4), N(S)1(-4)	**NZM1-XDVR** 260135		1 off	NZM1, 2, 3: Can also be combined with insulating surround. MODAN handle position detection by wire release can be retrofitted.
		NZM2(-4), PN2(-4), N(S)2(-4)	**NZM2-XDVR** 260137			
		NZM3(-4), PN3(-4), N(S)3(-4)	**NZM3-XDVR** 260140			
		NZM4(-4), N(S)4(-4)	**NZM4-XDVR** 266610			
	Lockable on the 0 position on the handle using up to 3 padlocks.	NZM1(-4), PN1(-4), N(S)1(-4)	**NZM1-XDVGR** 285249			Can also be combined with insulating surround.
		NZM2(-4), PN2(-4), N(S)2(-4)	**NZM2-XDVGR** 285280			

Notes Circuit-breaker can also be installed in a lying position 90 ° left/right, with the handle still in the same position.

		For use with	Part no. Article no. when ordered separately	Price see price list	Std. pack	Notes
Rotary handle on switch with door interlock						
Complete with rotary drive and insulating surround						
Standard, black/grey						
	Lockable on the 0 position on the handle using up to 3 padlocks, can also be modified for the I position. Also available with door interlock e.g. for MCC service distribution.	NZM1(-4), PN1(-4), N(S)1(-4)	**NZM1-XDTV** 260131		1 off	Door interlock • In the ON position, can be defeated from the outside using a 1 mm pin • Not defeated in the locked OFF and ON positions • Door can be opened in OFF • Can only be switched ON when the door is closed
		NZM2(-4), PN2(-4), N(S)2(-4)	**NZM2-XDTV** 260133			
Red-yellow for Emergency-Stop						
	Lockable on the 0 position on the handle using up to 3 padlocks. Also available with door interlock e.g. for MCC service distribution	NZM1(-4), PN1(-4), N(S)1(-4)	**NZM1-XDTVR** 260142		1 off	
		NZM2(-4), PN2(-4), N(S)2(-4)	**NZM2-XDTVR** 260144			
Rotary handle						
Divergent to normal IEC handles: Door opening only possible with active rotation beyond the 0 position. Complete with rotary drive and insulating surround						
Standard, black/grey						
	Lockable on the 0 position on the handle using up to 3 padlocks. Also available with door interlock e.g. for MCC service distribution.	NZM1, N(S)1	**NZM1-XDTV-NA** 271453		1 off	Door interlock • In the ON position, can be defeated from the outside using a 1 mm pin • Not defeated in the locked OFF and ON positions • Door opening only possible with active rotation beyond the 0 position. • Can only be switched ON when the door is closed • Cannot be combined with mechanical interlock
		NZM2, N(S)2	**NZM2-XDTV-NA** 271454			
Red-yellow for Emergency-Stop						
	Lockable on the 0 position on the handle using up to 3 padlocks. Also available with door interlock e.g. for MCC service distribution.	NZM1, N(S)1	**NZM1-XDTVR-NA** 271455			
		NZM2, N(S)2	**NZM2-XDTVR-NA** 271456			

Notes Circuit-breaker can also be installed in a lying position 90 ° left/right, with the handle still in the same position.

		Type	For use with	Part no. Article no. when ordered separately	Price see price list	Std. pack
Main switch assembly kit						
Equipment supplied: • Rotary door-coupling handle • NZM...-XV4 extension shaft • External warning plate/designation label in German/English • Black and yellow flash For enhanced protection against direct contact on the incomer side, IP2X protection against contact with a finger can be ordered → 10/49 Other external warning plates/designation labels can be clipped on.						
With black door coupling rotary handle						
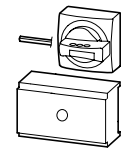	Lockable on the 0 position on the handle using up to 3 padlocks, can also be modified for the I position. With door interlock.		NZM1(-4) PN1(-4), N(S)1(-4)	**NZM1-XHB** 266626		1 off
			NZM2(-4) PN2(-4), N(S)2(-4)	**NZM2-XHB** 266627		
			NZM3(-4) PN3(-4), N(S)3(-4)	**NZM3-XHB** 266628		
			NZM4(-4) N(S)4(-4)	**NZM4-XHB** 271779		
With red door coupling rotary handle for using switch as Emergency-Stop device according to IEC/EN 602041, VDE 0113 Part 1						
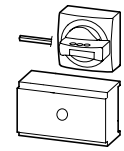	Lockable on the 0 position on the handle using up to 3 padlocks. Lockable door as additional feature, locking facility on circuit-breaker in 0 position.		NZM1(-4) PN1(-4), N(S)1(-4)	**NZM1-XHBR** 266632		
			NZM2(-4) PN2(-4), N(S)2(-4)	**NZM2-XHBR** 266633		
			NZM3(-4) PN3(-4), N(S)3(-4)	**NZM3-XHBR** 266634		
			NZM4(-4) N(S)4(-4)	**NZM4-XHBR** 271842		
Main switch assembly kit for side panel mounting						
Actuation of the switch on the control panel side wall **Switch mounting on mounting plate** Equipment supplied: • Door coupling rotary handle • NZM...-XV4 extension shaft • External warning plate/designation label in German/English • Black and yellow flash For enhanced protection against direct contact on the incomer side, IP2X protection against contact with a finger can be ordered → 10/49 Other external warning plates/designation labels can be clipped on.						
Standard, black/grey						
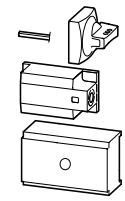	Lockable on the 0 position on the handle using up to 3 padlocks, can also be modified for the I position.	For operation on the left	NZM1(-4) PN1(-4), N(S)1(-4)	**NZM1-XS-L** 266641		1 off
			NZM2(-4) PN2(-4), N(S)2(-4)	**NZM2-XS-L** 266642		
			NZM3(-4) PN3(-4), N(S)3(-4)	**NZM3-XS-L** 266643		
			NZM4(-4) N(S)4(-4)	**NZM4-XS-L** 289806		
		For operation on the right	NZM1(-4) PN1(-4), N(S)1(-4)	**NZM1-XS-R** 266644		
			NZM2(-4) PN2(-4), N(S)2(-4)	**NZM2-XS-R** 266645		
			NZM3(-4) PN3(-4), N(S)3(-4)	**NZM3-XS-R** 266646		
			NZM4(-4) N(S)4(-4)	**NZM4-XS-R** 289807		
Red-yellow for Emergency-Stop						
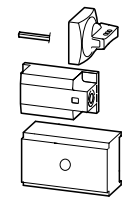	Lockable on the 0 position on the handle using up to 3 padlocks.	For operation on the left	NZM1(-4) PN1(-4), N(S)1(-4)	**NZM1-XSR-L** 266653		
			NZM2(-4) PN2(-4), N(S)2(-4)	**NZM2-XSR-L** 266654		
			NZM3(-4) PN3(-4), N(S)3(-4)	**NZM3-XSR-L** 266655		
			NZM4(-4) N(S)4(-4)	**NZM4-XSR-L** 289808		
		For operation on the right	NZM1(-4) PN1(-4), N(S)1(-4)	**NZM1-XSR-R** 266656		
			NZM2(-4) PN2(-4), N(S)2(-4)	**NZM2-XSR-R** 266657		
			NZM3(-4) PN3(-4), N(S)3(-4)	**NZM3-XSR-R** 266658		
			NZM4(-4) N(S)4(-4)	**NZM4-XSR-R** 289809		

	Type	For use with	Part no. Article no. when ordered separately	Price see price list	Std. pack
Main switch assembly kit for side panel mounting with mounting bracket					

For direct mounting of circuit-breaker and handle in the side wall of the control cabinet
Equipment supplied:
- Door coupling rotary handle
- Mounting bracket
- Special short extension shaft
- External warning plate/designation label in German/English
- Black and yellow flash

For enhanced protection against direct contact on the incomer side, IP2X protection against contact with a finger can be ordered → 10/49
Other external warning plates/designation labels can also be clipped on.

Standard, black/grey						
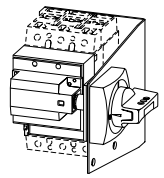	Can be locked in 0 position, with adequate modification also in I position. Narrowest minimum clearance between enclosure side plates of control panel and circuit-breaker is defined by mounting bracket. Extensions cannot be used.	For operation on the left	NZM1(-4) PN1(-4), N(S)1(-4)	**NZM1-XSM-L** 266663		1 off
		For operation on the left	NZM2(-4) PN2(-4), N(S)2(-4)	**NZM2-XSM-L** 266664		
		For operation on the right	NZM1(-4) PN1(-4), N(S)1(-4)	**NZM1-XSM-R** 266665		
		For operation on the right	NZM2(-4) PN2(-4), N(S)2(-4)	**NZM2-XSM-R** 266666		
Red-yellow for Emergency-Stop						
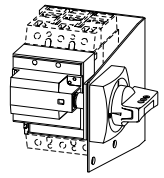	Lockable in 0 position on handle. Narrowest minimum clearance between enclosure side plates of control panel and circuit-breaker is defined by mounting bracket. Extensions cannot be used.	For operation on the left	NZM1(-4) PN1(-4), N(S)1(-4)	**NZM1-XSRM-L** 266671		1 off
		For operation on the left	NZM2(-4) PN2(-4), N(S)2(-4)	**NZM2-XSRM-L** 266672		
		For operation on the right	NZM1(-4) PN1(-4), N(S)1(-4)	**NZM1-XSRM-R** 266673		
		For operation on the right	NZM2(-4) PN2(-4), N(S)2(-4)	**NZM2-XSRM-R** 266674		

Add-on plate

For fitting to the mounting bracket when using N conductor or PE conductor terminals K25, K50, K95 or K150.

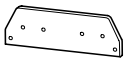			NZM1(-4), PN1(-4), N(S)1(-4) NZM2(-4), N(S)2(-4)	**NZM1/2-XZB** 266676		1 off

Additional terminal arrangement for side wall operator with mounting bracket
NZM1-XS(R)M-…, NZM2-XS(R)M-…
Additional terminals K25, K50, K95, K150 → 10/99

Actuation:

3 pole

For operation on the right

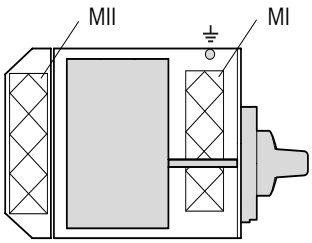

For operation on the left

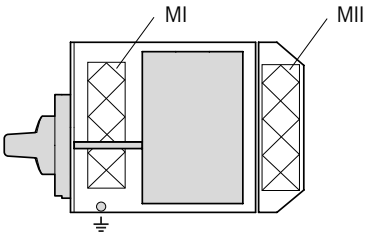

4 pole

For operation on the right

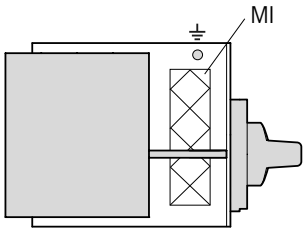

For operation on the left

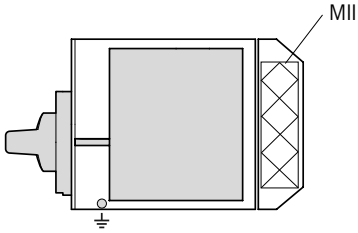

Mounting areas		MI				MII	
Variation options		V1	V2	V3	V4	V1	V2
Maximum number of additional terminals	K25	2 ×	–	–	–	–	–
	K50	–	2 ×	–	–	–	–
	K95	–	–	1 ×	–	1 ×	–
	K150	–	–	–	1 ×	–	1 ×

Example: In mounting area MI, variation option 1 allows the K25 additional terminal to be mounted twice.

		For use with	Part no. Article no. when ordered separately	Price see price list	Std. pack	Notes
Rear drive For direct rear connection of the switch to the side of the control panel or control panel door. Switch actuation on rear through side plate or control panel door. For switch with toggle lever. For enhanced protection against direct contact on the incomer side, IP2X protection against contact with a finger can be ordered → 10/47 Degree of protection IP66, UL/CSA Type 4X						
Standard, black/grey						
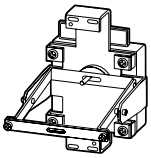	Lockable on the 0 position on the handle using up to 3 padlocks.	NZM1, N1, NS1, PN1	**NZM1-XRAV** 107245		1 off	External warning plate can be clipped on
		NZM1-4, N1-4, PN1-4	**NZM1-4-XRAV**[1)] 107246			
		NZM2, N2, NS2, PN2	**NZM2-XRAV** 107247			
		NZM2-4, N2-4, PN2-4	**NZM2-4-XRAV**[1)] 107248			
Red-yellow for Emergency-Stop						
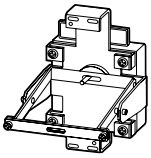	Lockable on the 0 position on the handle using up to 3 padlocks.	NZM1, N1, NS1, PN1	**NZM1-XRAVR** 107249		1 off	
		NZM1-4, N1-4, PN1-4	**NZM1-4-XRAVR**[1)] 107260			
		NZM2, N2, NS2, PN2	**NZM2-XRAVR** 107261			
		NZM2-4, N2-4, PN2-4	**NZM2-4-XRAVR**[1)] 107262			

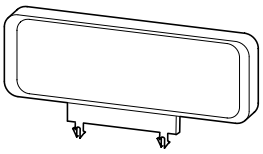

German/English	NZM1(-4), PN1(-4), N(S)1(-4) NZM2(-4), PN2(-4), N(S)2(-4) NZM3(-4), PN3(-4), N(S)3(-4) NZM4(-4), N(S)4(-4)	**ZFS61/62-NZM7** 272525		1 off	A bilingual external warning plate/ designation label in German/English is already included in the main switch assembly kit.
German		**ZFS61-NZM7** 051089			
English		**ZFS62-NZM7** 065957			
French		**ZFS63-NZM7** 065958			
Blank (for engraving or printing)		**ZFS60-NZM7** 065896			
Further languages		**ZFS*-NZM7** 999978			External warning plates are available in the following languages: 64 Bulgarian, 65 Danish, 66 Finnish, 67 Dutch, 68 Italian, 69 Greek, 70 Norwegian, 71 Polish, 72 Portuguese, 73 Romanian, 74 Russian, 75 Swedish, 76 Serbo-Croatian, 77 Spanish, 78 Czech, 79 Turkish, 80 Hungarian, 81 Afrikaans To obtain the order number, insert the language code number into the type reference required. Ordering example External warning plate in Finnish: ZFS**66**-NZM7
Lightning symbol Including terminal marking for main switch					
Small 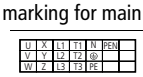	NZM1(-4), PN1(-4), N(S)1(-4) NZM2(-4), PN2(-4), N(S)2(-4)	**BPF-NZM7** 217294		10 off	Included as standard in main switch assembly kit
Large 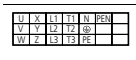	NZM3(-4), PN3(-4), N(S)3(-4) NZM4(-4), N(S)4(-4)	**BPF-NZM10** 231363		10 off	

Notes 1) please inquire

		For use with	Part no. Article no.	Price see price list	Std. pack	Std. pack
Side-mounted handle						
For mounting outside the control panel door. Actuation of a switch with toggle lever using a Bowden cable and mechanical components mounted on the front end of the switch. For switch with toggle lever **Attention! Intended exclusively for use outside the scope of validity of IEC/ EN 60947.**						
Handle, metal, silver/red						
	Degree of protection UL/CSA Type 12	NZM2...-NA NS2...-NA NZM3...-NA NS3...-NA	**NZM-XSHGVR12-NA** 107269		1 off	Lockable in 0-position on handle with up to 3 padlocks, for 1 door of an American style control panel door (door plus wide bar beside the door). For each handle 1 additional mechanical unit and 1 Bowden cable is required
	Degree of protection UL/CSA Type 4X	NZM2...-NA NS2...-NA NZM3...-NA NS3...-NA	**NZM-XSHGVR4X-NA** 107268			
Mechanical unit						
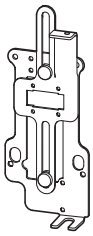		NZM2...-NA NS2...-NA	**NZM2-XSHM-NA** 107266		1 off	For mounting on the front end of a switch with toggle lever, including fixing sundries.
		NZM3...-NA NS3...-NA	**NZM3-XSHM-NA** 107267			
Bowden cables						
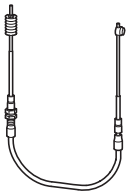	Nominal length 36"	NZM2...-NA NS2...-NA NZM3...-NA NS3...-NA	**NZM-XSHBZ36-NA** 107263		1 off	
	Nominal length 48"	NZM2...-NA NS2...-NA NZM3...-NA NS3...-NA	**NZM-XSHBZ48-NA** 107264			
	Nominal length 60"	NZM2...-NA NS2...-NA NZM3...-NA NS3...-NA	**NZM-XSHBZ60-NA** 107265			

	For use with	Part no. Article no. when ordered separately	Price see price list	Std. pack	Notes
Add-on handle					
Enables switching when the control panel door is open					
	NZM1(-4), PN1(-4), N(S)1(-4) NZM2(-4), PN2(-4), N(S)2(-4)	**NZM1/2-XDZ** 266621		1 off	Push-fits on to the extension shaft 100 mm free extension shaft required. Cannot be combined with NZM...-XT...-60 door coupling rotary handles as well as NZM...-XT...-0.
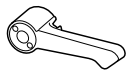	NZM3(-4), PN3(-4), N(S)3(-4) NZM4(-4), N(S)4(-4)	**NZM3/4-XDZ** 266622		1 off	
Insulating surrounds					
For toggle lever, rotary handle with rotary drive and remote operator. Degree of protection IP40					
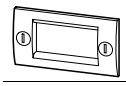	NZM1(-4) PN1(-4), N(S)1(-4)	**NZM1-XBR** 260195		1 off	For oblong cut-out on doors and enclosures with material thicknesses of 1.5 – 5 mm. External warning plate/designation label can be clipped on NZM4-XBR cannot be combined with rotary handle with rotary drive.
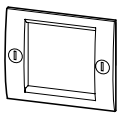	NZM2(-4) PN2(-4), N(S)2(-4)	**NZM2-XBR** 260197			
	NZM3(-4) PN3(-4), N(S)3(-4)	**NZM3-XBR** 284645			
	NZM4(-4) N(S)4(-4)	**NZM4-XBR** 284646			
Toggle lever locking device					
Off position lockable using up to 3 padlocks (hasp thickness 4 – 8 mm) Not UL/CSA approved					
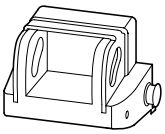	NZM1(-4) PN1(-4), N(S)1(-4)	**NZM1-XKAV** 260199		1 off	Cannot be combined with insulating surround.
	NZM2(-4), PN2(-4), N(S)2(-4) NZM3(-4), PN3(-4), N(S)3(-4)	**NZM2/3-XKAV** 260201		1 off	
Spacers					
Enables fast and low-priced adjustment of differing frame sizes with/without rotary handle to the same front depth					
	NZM1(-4), PN1(-4), N(S)1(-4) NZM2(-4), PN2(-4), N(S)2(-4)	**NZM1/2-XAB** 260203		1 set	Grid depth 17.5 mm, M4 thread Type contains 4 off spacer Maximum component capacity: NZM1: 4 units per fixing screw, NZM2: 2 units per fixing screw 2 (NZM1) or 4 (NZM2) fixing screws contained per circuit-breaker
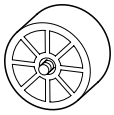	NZM3(-4) PN3(-4), N(S)3(-4) NZM4(-4) N(S)4(-4)	**NZM3-XAB** 260211		1 set	Grid depth 17.5 mm, M5 thread One set contains 4 spacers NZM3, NZM4: 1 off per fixing screw 4 fixing screws per switch included
Clip plate					
Enables snap-fit of the circuit-breaker to a DIN rail					
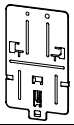	NZM1(-4) PN1(-4) N(S)1(-4)	**NZM1-XC35** 260213		1 off	For top-hat rail 35 mm
	NZM2 PN2 N(S)2	**NZM2-XC75** 260215		1 off	For top-hat rail 75 mm Not suitable for circuit-breakers with remote operator.

	For use with	Part no. Article no. when ordered separately	Price see price list	Std. pack	Notes
Mechanical interlocking of (door coupling) rotary handles					
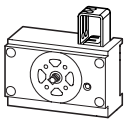	NZM1(-4) PN1(-4), N(S)1(-4)	**NZM1-XMV** 281581		1 off	Rotary handles on switches or door coupling rotary handles are additionally required. Cannot be combined with paralleling mechanisms, side wall operators and remote operator as well as NZM4-XBR insulating surrounds. Cannot be combined with NZM…-XTV…-NA door coupling rotary handles. In order to establish a mechanical interlock at least 2 interlock modules are required. Possible combinations and interlock variants → Project engineering Order Bowden cable separately
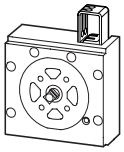	NZM2(-4) PN2(-4), N(S)2(-4)	**NZM2-XMV** 281582			
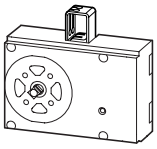	NZM3(-4) PN3(-4), N(S)3(-4)	**NZM3-XMV** 281583			
	NZM4(-4) N(S)4(-4)	**NZM4-XMV** 281584			
Bowden cables					
For mechanical interlocking of (door coupling) rotary handles					
	NZM1(-4), PN1(-4), N(S)1(-4) NZM2(-4), PN2(-4), N(S)2(-4) NZM3(-4), PN3(-4), N(S)3(-4) NZM4(-4), N(S)4(-4)	**NZM-XBZ225** 281585		1 off	
		NZM-XBZ600 281586			
		NZM-XBZ1000 281587			
Mechanical interlock for remote operator					
For 2 switches of the same or next frame size with each other. Mounting beside one another.					
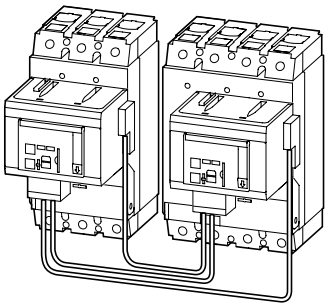	NZM2(-4), N(S)2(-4) +NZM2(-4), N(S)2(-4)	**NZM2-XMVR** 104543		1 off	Type contains parts for both switches. Remote operator also required. Maximum switching distance → engineering Cannot be combined with rotary handles, door coupling rotary handles and early-make auxiliary contacts.
	NZM2(-4), N(S)2(-4) +NZM3(-4), N(S)3(-4)	**NZM2/3-XMVR** 104544			
	NZM3(-4), N(S)3(-4) +NZM3(-4), N(S)3(-4)	**NZM3-XMVR** 104545			
	NZM3(-4), N(S)3(-4) +NZM4(-4), N(S)4(-4)	**NZM3/4-XMVR** 104546			
	NZM4(-4), N(S)4(-4) +NZM4(-4), N(S)4(-4)	**NZM4-XMVR** 104547			
For 2 switches of the same or different type with opposed operation. Extra long Bowden cable for mounting one above the other or in adjacent enclosures.					
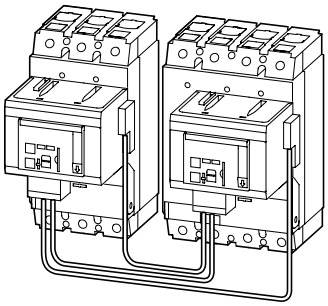	NZM2(-4), N(S)2(-4) +NZM2(-4), N(S)2(-4)	**NZM2-XMVRL** 104548		1 off	Type contains parts for both switches. Remote operator also required. Maximum switching distance → engineering Cannot be combined with rotary handles, door coupling rotary handles and early-make auxiliary contacts.
	NZM2(-4), N(S)2(-4) +NZM3(-4), N(S)3(-4)	**NZM2/3-XMVRL** 104549			
	NZM3(-4), N(S)3(-4) +NZM3(-4), N(S)3(-4)	**NZM3-XMVRL** 104550			
	NZM3(-4), N(S)3(-4) +NZM4(-4), N(S)4(-4)	**NZM3/4-XMVRL** 104551			
	NZM4(-4), N(S)4(-4) +NZM4(-4), N(S)4(-4)	**NZM4-XMVRL** 104552			

	For use with	Part no. Article no. when ordered separately	Price see price list	Std. pack	Notes
Paralleling mechanism					
Simultaneous actuation of 2 PN switch-disconnectors of the same type mounted side-by-side. not UL/CSA approved					
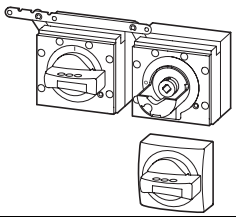	PN1(-4) + PN1(-4)	**PN1-XPA** 283471		1 off	**PN1, PN2** • 1 × rotary handle on switch (-XD) supplied. • 1 × door coupling rotary handle (-XTVD) supplied.
	PN2(-4) + PN2(-4)	**PN2-XPA** 283472			
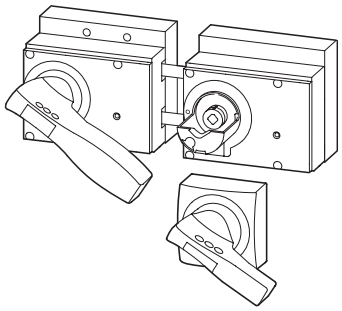	PN3(-4) + PN3(-4)	**PN3-XPA** 283473			**PN3** • 1 × rotary handle on switch (cannot be interlocked) supplied. • 1 × door coupling rotary handle (cannot be interlocked) supplied. • Not suitable for use as a main switch.

Notes

Extension shaft (-XV4(6)) additionally required for the door coupling rotary handle.
Cannot be combined with mechanical interlock, insulating surrounds, side wall operators or remote operators

For use as Emergency-Stop device
For this the door coupling rotary handle requires an exchange thumb-grip in red/yellow according to the following order nos.
- for PN1 and PN2: NZM2-XDGVR → 100747
- for PN3: NZM3-XDGVR → 100764

Note: The locking function of these thumb-grips must not be used.

		For use with	Part no. Article no.	Price see price list	Std. pack	Notes
Extension shaft						
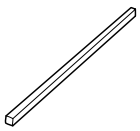	Max. mounting depth: 400 mm	NZM1(-4), PN1(-4), N(S)1(-4) NZM2(-4), PN2(-4), N(S)2(-4)	**NZM1/2-XV4** 261232		1 off	Can be cut to required length
		NZM3(-4), PN3(-4), N(S)3(-4) NZM4(-4), N(S)4(-4)	**NZM3/4-XV4** 261234			
	Max. mounting depth: 600 mm	NZM1(-4), PN1(-4), N(S)1(-4) NZM2(-4), PN2(-4), N(S)2(-4)	**NZM1/2-XV6** 260191			
		NZM3(-4), PN3(-4), N(S)3(-4) NZM4(-4), N(S)4(-4)	**NZM3/4-XV6** 260193			

Notes Circuit-breaker can also be installed in a lying position 90 ° left/right, with the handle still in the same position.

	For use with	Rated current I_e A	Part no. Article no. when ordered separately	Price see price list	Std. pack	Notes
Component adapter for circuit-breakers and switch-disconnectors for 60 mm busbar system For installation on flat copper busbars 12 … 30 x 5 … 10, double T and triple T profile Rated operational voltage U_e: 690 V • Halogen free • Temperature resistant to 120 °C • Self-extinguishing to UL 94 • Approved for feeder branch circuits to UL508A up to 600 V • 3 pole						
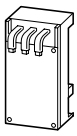	NZM1, PN1, N(S)1	160	**NZM1-XAD160** 104554		1 off	For breakers with box terminal as standard connection Connection to system at top using the supplied connection cable In conjunction with IP2X protection against contact with a finger Enhancement of the protection against direct contact on the switch outgoer side possible
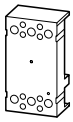	NZM2, PN2, N(S)2	250	**NZM2-XAD250** 104555			Connection to the system possible at top or bottom via connection on rear (+)NZM2-XKR4… Mounting using clamp and screw fixing.
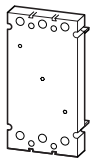	NZM3, PN3, N(S)3	550	**NZM3-XAD550** 104556			Connection to the system possible at top via connection on rear (+)NZM3-XK13… Mounting using clamp and screw fixing.

	For use with	Rated current I_e A	Part no. suffix Article no. when ordered with basic unit	Price see price list	Part no. Article no. when ordered separately	Price see price list	Std. pack
Component adapter for circuit-breakers and switch-disconnectors for 60 mm busbar system For installation on flat copper busbars 12 … 30 x 5 … 10, double T and triple T profile Rated operational voltage U_e: 690 V • Halogen free • Temperature resistant to 120 °C • Self-extinguishing to UL 94 • Approved for feeder branch circuits to UL508A up to 600 V • 3 pole							
Connection on rear for component adapters For component adapters for NZM2, NZM3							
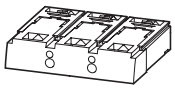	NZM2, PN2, N(S)2	250	**+NZM2-XKR4O** 281664		**NZM2-XKR4** 281666		1 off
	NZM2, PN2, N(S)2	250	**+NZM2-XKR4U** 281665		**NZM3-XKR13** 281668		
	NZM3, PN3, N(S)3	550	**+NZM3-XKR13O** 281667				

Notes Part no. and part no. suffix include parts for one switch side at top or bottom (with NZM3 top only). Required with component adapter and switch with connection on rear, see for example component adapter 104555 and 104556.
O = for fitting at the top
U = for fitting at the bottom

	For use with	Rated control voltage U_s V	Part no. Article no. when ordered separately	Price see price list	Std. pack
Remote operator					
For remote switching of circuit-breakers and switch-disconnectors. ON and OFF switching and resetting by means of 2-wire or 3-wire control. Can be synchronized. Local switching by hand possible Lockable in the 0 position of the remote operator with up to 3 padlocks (hasp thickness: 4 – 8 mm)					
	NZM2(-4) N(S)2(-4)	110 – 130 V 50/60 Hz	**NZM2-XR110-130AC** 259830		1 off
		208 – 240 V 50/60 Hz	**NZM2-XR208-240AC** 259832		
		380 – 440 V 50/60 Hz	**NZM2-XR380-440AC**[1)] 259834		
		24 – 30 V DC	**NZM2-XR24-30DC** 259836		
		110 – 130 V DC	**NZM2-XR110-130DC** 259840		
		220 – 250 V DC	**NZM2-XR220-250DC** 259842		
	NZM3(-4) N(S)3(-4)	110 – 130 V 50/60 Hz	**NZM3-XR110-130AC** 259848		
		208 – 240 V 50/60 Hz	**NZM3-XR208-240AC** 259850		
		380 – 440 V 50/60 Hz	**NZM3-XR380-440AC**[1)] 259852		
		24 – 30 V DC	**NZM3-XR24-30DC** 259854		
		110 – 130 V DC	**NZM3-XR110-130DC** 259858		
		220 – 250 V DC	**NZM3-XR220-250DC** 259860		
	NZM4(-4) N(S)4(-4)	110 – 130 V 50/60 Hz	**NZM4-XR110-130AC** 266684		
		208 – 240 V 50/60 Hz	**NZM4-XR208-240AC** 266685		
		380 – 440 V 50/60 Hz	**NZM4-XR380-440AC**[1)] 266686		
		24 – 30 V DC	**NZM4-XR24-30DC** 266691		
		110 – 130 V DC	**NZM4-XR110-130DC** 266693		
		220 – 250 V DC	**NZM4-XR220-250DC** 266694		
Shroud for 4th pole Additional shroud for mounting the NZM2-XR... and NZM3-XR... on a 4-pole switch.					
	NZM2-4 N2-4		**NZM2-XAVPR** 266677		1 off
	NZM3-4 N3-4		**NZM3-XAVPR** 266678		1 off
Clamp terminal springloaded clamp Control circuit terminal springloaded terminals					
	NZM...-XR...		**NZM-XRC** 266696		1 off
Protective cover for door cutout Transparent protective shroud to increase the degree of protection to IP54					
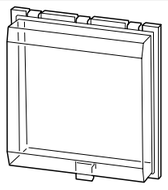	–		**RTR-NZM10** 034825		1 off

Notes [1)] Not UL/CSA approved.

Notes

Remote operator are combinable with NZM circuit-breakers and N switch-disconnectors but not with PN switch-disconnectors.
A standard auxiliary contact (HIN) for the switch position detection is supplied.
When installing the NZM2-XR… and NZM3-XR… remote operators on 4 pole switches, an additional 4 pole NZM2-XAVPR or NZM3-XAVPR shroud is necessary.

3-wire control

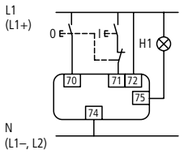

Terminal 70/71:
Please note during engineering:
Full current flows though the contact during make and break!
RMQ series contact elements can be used for the NZM2(3,4)-XR… remote operators.

2-wire control

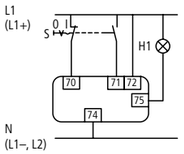

Terminal 75:
Operational readiness signal when the cover is closed, and not locked.
AC-15: 400 V; 2 A
DC-13: 220 V; 0.2 A

Three-wire control with automatic reset to the 0 position after the switch has tripped

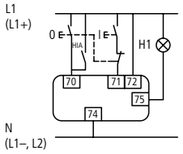

Switching cycle:

NZM2-XR

NZM3-XR

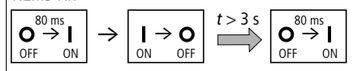

NZM4-XR

The time interval between OFF and ON is 3 seconds.
On commands received during the time interval are ignored within the first 3 seconds after switch off.

Electrical remote switching and manual tripping (push to trip) are still possible.

	Description	Part no. Article no.	Price see price list	Std. pack	Notes
Diagnostics and parameterization software (in situ)					
	PC software for direct connection to all new NZM circuit-breakers with electronic releases (IEC and UL/CSA devices) or for direct connection to the DMI module, including the required connectionn cable. Protection parameter: online display and curve display, expoet option to curve programme "Moeller CurveSelect" Warning and release messages: reading of diagnostic memory also in volt-free state. Load currents: display and trend indication Recording and export options to Excel for load currents and diagnostic messages. Configuration of the DMI: motor starter, remote operator, assignment of the DMI inputs and outputs and displays.	**NZM-XPC-KIT** 265631		1 off	Only suitable for use in conjunction with circuit-breakers having electronic releases. Free-of-charge download of the manual AWB1230-1459 and a demo software at www.moeller.net.
Data Management Interface (DMI Module)					
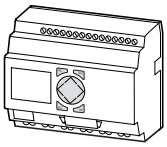	Query of diagnostics and operational data, display of currents, motor starter function, parameterisation and control of the circuit-breaker with electronic release Comprehensive remote diagnostic options and remote operation via fieldbus in combination with a field Bus connection. Inclusive NZM-XDMI-CAB connection cable between NZM and DMI (length: 2 m).	**NZM-XDMI612** 260217		1 off	Only suitable for use in conjunction with circuit-breakers having **electronic** releases. Free download of manual AWB1230-1441 at www.moeller.net.
Expansion unit, networking					
Interfacing to the DMI module for transfer of phase currents, parameter data, status data and diagnostics data as well as the circuit-breaker position (wiring of auxiliary contacts to DMI inputs). DMI configuration via field bus. Actuation of the DMI motor starter functions and the NZM remote operator (via DMI outputs wiring). Detection of digital inputs and actuation of the outputs via field Bus					
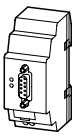	Fieldbus interface: to PROFIBUS-DPV1 slave. Can be operated with class 1 and class 2 masters. Addresses available: 1 to 126	**NZM-XDMI-DPV1** 270333		1 off	Connected to the DMI module and has the same contour appearance. Replaces the DPV0 interface EASY204-DP.
	Fieldbus connection to CANopen Addresses available: 1 to 127	**EASY221-CO** 233539		1 off	
	Fieldbus connection to DeviceNet Addresses available: 0 to 63	**EASY222-DN** 233540		1 off	
Switched-mode power supply unit					
For DMI module					
	• Rated input voltage: 50/60 HZ: 115/230 V AC • Rated output voltage (residual ripple): 24 V DC (± 3 %) • Rated output current: 1.25 A	**EASY400-POW** 212319		1 off	
Telescopic adapter					
For DMI module For equalization of the mounting depth of rear mounting devices in CI enclosures and cabinets					
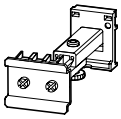	With 35 mm top-hat rail IEC/EN 60715, adjustable from 75 – 115 mm. Screw-on and snap fitting.	**M22-TA** 226161		1 off	

Description	Part no. Article no.	Price see price list	Std. pack	Notes
FDT frame software for operating field devices				
PC software for integration of software modules (DTM's) according to the FDT standard V1.2 (e.g. NZM-XPC-DTM). • Operation of a temporary or stationary service station for engineering, remote diagnostics, remote operation and remote parameter definition of networked switchgear and field devices. • Engineering of the network topology of networked field devices. • Overview representation of the topology with online status information. • Access to the device specific DTM's for configuration, operation, parameterization and diagnostics of the devices. • Storage of all engineering information in a central database. Download and upload from/to the devices.	**FDT-NAVIGATOR** 281623		1 off	The connection of the field devices can be implemented via the PROFIBUS-DPV1 master or via gateways (e.g.: USB/PROFIBUS, Ethernet/PROFIBUS). Communication interfacing for the PC and a communication DTM (driver) is necessary for this purpose. Please inquire.
DTM software module to FTD standard				
PC software module (Device Type Manager) to FDT/DTM standard V1.2 for integration in the FDT navigator or other FDT capable framework software packages (primary control system, PLC engineering systems). • Remote diagnostics, remote monitoring, remote parameter definition and remote operation of the new NZM2,3,4 circuit-breakers with electronic trip release via Profibus-DPV1. • Display of the circuit-breaker state (on/off/tripped), the phase currents, parameter data, status data and diagnostics data. • Definition of the trip parameters. • Display and setting of the DMI motor starter functions and assignment of the DMI inputs and outputs. • Control of the motor starter functions.	**NZM-XPC-DTM** 281624		1 off	For connection of the circuit-breaker to the PROFIBUS-DP fieldbus, the accessory device NZM-XDMI612 and the fieldbus interface NZM-XDMI-DPV1 are required.

	Rated uninterrupted current I_u A	Terminal capacities mm²	Part no. Article no. when ordered separately	Price see price list	Std. pack
Additional insulated terminals					
For looping through the neutral and protective conductor 1-pole					
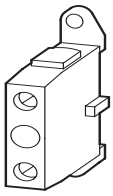	32	Flexible, 1 × (1.5 – 6)	**K10/1** 093827		10 off
	63	Flexible, 1 × (6 – 16), stranded, 1 × (16 – 25)	**K25/1** 096200		
	100	Flexible, 1 × (10 – 35), stranded, 1 × (16 – 50)	**K50/1** 098573		
	160	Stranded, 1 × (16 – 95)	**K95/1N/BR** 012336		1 off
	250	Stranded, 1 × (35 – 150), 2 × (16 – 70)	**K150/1/BR** 014709		
	400	Stranded, 1 × (50 – 240), 2 × (25 – 120)	**K240/1/BR** 017082		
	630	Stranded, 1 × (240 – 300), 2 × (50 – 240)	**K2X240/1/BR** 019455		

		Max. rated uninterrupted current I_u A	For use with	Part no. Article no. when ordered separately	Price see price list	Std. pack
Insulated enclosures						
With door coupling rotary handle Complete incl. all necessary functional parts Degree of protection IP65 not UL/CSA approved						
Standard, black/grey						
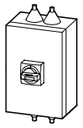	Lockable on the 0 position on the handle using up to 3 padlocks. Additionally with cover interlock.	≦ 63 A	PN1, N(S)1	**NZM1-XCIK5-TVD** 271521		1 off
		≦ 63 A	NZM1, PN1, N(S)1	**NZM1-XCI23-TVD** 271522		
		≦ 125 A	NZM1(-4), PN1(-4), N(S)1(-4)	**NZM1-XCI43-TVD** 271523		
		≦ 160 A	NZM1(-4), PN1(-4), N(S)1(-4)	**NZM1-XCI43/2-TVD** 104645		
		≦ 200 A	NZM2(-4), PN2(-4), N(S)2(-4)	**NZM2-XCI43-TVD** 271524		
		≦ 250 A	NZM2(-4), PN2(-4), N(S)2(-4)	**NZM2-XCI45-TVD** 280418		
		≦ 400 A	NZM3(-4), PN3(-4), N(S)3(-4)	**NZM3-XCI48-TVD** 271525		
Red-yellow for Emergency-Stop						
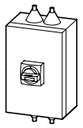	Lockable on the handle on the switch[1] using up to 3 padlocks. Lockable in 0 position on handle. Cover interlock as additional feature, locking facility on circuit-breaker in 0 position.	≦ 63 A	PN1, N(S)1	**NZM1-XCIK5-TVDVR** 271526		1 off
		≦ 63 A	NZM1, PN1, N(S)1	**NZM1-XCI23-TVDVR** 271527		
		≦ 125 A	NZM1(-4), PN1(-4), N(S)1(-4)	**NZM1-XCI43-TVDVR** 271528		
		≦ 160 A	NZM1(-4), PN1(-4), N(S)1(-4)	**NZM1-XCI43/2-TVDVR** 104646		
		≦ 200 A	NZM2(-4), PN2(-4), N(S)2(-4)	**NZM2-XCI43-TVDVR** 271529		
		≦ 250 A	NZM2(-4), PN2(-4), N(S)2(-4)	**NZM2-XCI45-TVDVR** 279356		
		≦ 400 A	NZM3(-4), PN3(-4), N(S)3(-4)	**NZM3-XCI48-TVDVR** 271530		

[1] **Notes** [1] With up to 3 padlocks.

Insulated enclosure description	Retrofit terminals with 3-pole switches: for 4th and 5th (if required) conductor (N, PE-conductor), with 4-pole switches: for 5th conductor (PE conductor)	**Notes**
CI-K5-160-M	K10/1, K25/1	Suitable for installation of circuit-breakers and switch-disconnectorsEnclosure for separate mounting with top and bottom cable entry. Include fixing straps for wall mounting. Short-circuit resistance at 415 V 50/60 Hz to 10 kA. Cannot be used in combination with NZM…-XR… remote operator…, NZM…-XSV plug-in unit or NZM…-XAV withdrawable unit. Insulated additional terminal for 4th or 5th pole should be ordered separately. CI-K5 enclosure with hard metric knock-outs CI23 enclosure with flanges CI43, CI45 and CI48 feature gland plates. **Only for switches with tunnel clamps for direct connection of cables.**
CI23-150	K10/1, K25/1	
CI43-150	K10/1, K25/1, K50/1, K95/1N/BR	
CI43-200	K10/1, K25/1, K50/1, K95/1N/BR	
CI43-200	K10/1, K25/1, K50/1, K95/1N/BR, K150/1/BR, K240/1/BR	
CI45-200	K10/1, K25/1, K50/1, K95/1N/BR, K150/1/BR, K240/1/BR	
CI48-250	K95/1N/BR, K150/1/BR, K240/1/BR, K2X240/1/BR	
CI-K5-160-M	K10/1, K25/1	
CI23-150	K10/1, K25/1	
CI43-150	K10/1, K25/1, K50/1, K95/1N/BR	
CI43-200	K10/1, K25/1, K50/1, K95/1N/BR	
CI43-200	K10/1, K25/1, K50/1, K95/1N/BR, K150/1/BR, K240/1/BR	
CI45-200	K10/1, K25/1, K50/1, K95/1N/BR, K150/1/BR, K240/1/BR	
CI48-250	K95/1N/BR, K150/1/BR, K240/1/BR, K2X240/1/BR	

	For use with			Part no. Order number for separate orders	Price see price list	Std. pack	Notes
Earth-fault release							
Not UL/CSA approved Suitable for use in three- and single-phase systems							
Pulse current sensitive according to core-balance principle							
For 3- and 4 pole NZM1(-4) circuit-breakers and N1(-4) switch-disconnectors, dependant on mains power U_e = 200 … 415 V 50/60 Hz,							
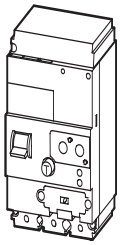	Rated fault current $I_{\Delta n}$ = 0.03 A	NZM1 N(S)1	3 pole	**NZM1-XFI30R** 104603		1 off	IEC/EN 60947-2 With $I_{\Delta n}$ = 0.03 A: delay time t_v always fixed settings at 10 ms. Alarm message > 30 % $I_{\Delta n}$ via yellow LED. Trip indication max. 2 auxiliary contacts (HIAFI) can be fitted by user: N/O = M22-K01, N/C = M22-K10 are reset via the reset toggle lever. If the trip-indicating auxiliary contact in the fault current block is used, the N/C contacts operates as a N/O contact and the N/C contact operates as an N/O contact (see HIAFI marking). Not in combination with insulated enclosure or main switch assembly kit for side panel mounting with mounting bracket NZM1-XFI…U not in combination with shunt or undervoltage relase. Rated ultimate short-circuit breaking capacity is determined by the fitted NZM1, NS1. If a switch-disconnector N1 is applied by the back-up fuse to be used → Technical data.
		NZM1-4 N1-4	4 pole	**NZM1-4-XFI30R** 104606			
	Rated fault current $I_{\Delta n}$ = 0.3 A	NZM1 N(S)1	3 pole	**NZM1-XFI300R** 104604			
		NZM1-4 N1-4	4 pole	**NZM1-4-XFI300R** 104607			
	Rated fault current $I_{\Delta n}$ = 0.03 – 0.1 – 0.3 – 0.5 – 1 – 3 A, delay time t_v = 10 – 60 – 150 – 300 – 450 ms.	NZM1 N(S)1	3 pole	**NZM1-XFIR** 104605			
		NZM1-4 N1-4	4 pole	**NZM1-4-XFIR** 104608			
Bottom mounting up to 100 A							
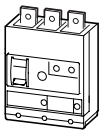	Rated fault current $I_{\Delta n}$ = 0.03 A	NZM1 N(S)1	3 pole	**NZM1-XFI30U**[1] 104609			
		NZM1-4 N1-4	4 pole	**NZM1-4-XFI30U** 104612			
	Rated fault current $I_{\Delta n}$ = 0.3 A	NZM1 N(S)1	3 pole	**NZM1-XFI300U** 104610			
		NZM1-4 N1-4	4 pole	**NZM1-4-XFI300U** 104613			
	Rated fault current $I_{\Delta n}$ = 0.03 – 0.1 – 0.3 – 0.5 – 1 – 3 A, delay time t_v = 10 – 60 – 150 – 300 – 450 ms.	NZM1 N(S)1	3 pole	**NZM1-XFIU** 104611			
		NZM1-4 N1-4	4 pole	**NZM1-4-XFIU** 104614			
Pulse current sensitive according to core-balance principle							
For 4 pole circuit-breaker NZM2-4 and switch-disconnector N2-4 independent of mains voltage U_e = 280 – 690 V 50/60 Hz bottom mounting up to 250 A							IEC/EN 60947-2 Auxiliary contacts (1 N/O, 1N/C integrated) are reset via the reset button. Not in combination with plug-in units, insulated enclosure or main switch assembly kit for side panel mounting with mounting bracket. Rated ultimate short-circuit breaking capacity is determined by the fitted NZM2. If a switch-disconnector N2 is applied by the back-up fuse to be used → Technical data.
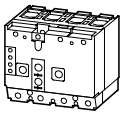	Rated fault current $I_{\Delta n}$ = 0.03 A	NZM2-4 N2-4	4 pole	**NZM2-4-XFI30** 292343		1 off	
	Rated fault current $I_{\Delta n}$ 0.1 - 0.3 - 1 - 3 A, delay time t_v = 60 - 150 - 300 - 450 ms	NZM2-4 N2-4	4 pole	**NZM2-4-XFI** 292344		1 off	
Core-balance principle with AC/DC current sensitivity (in range 0 – 100 kHz)							
For 4 pole NZM2-4 circuit-breakers and N2-4 switch-disconnectors, internal power supply U_e = 50 … 400 V, bottom mounting up to 250 A							IEC/EN 60947-2 Observe response threshold dependence on frequency! See "Frequency response" characteristic curve Auxiliary contacts (1 N/O, 1N/C integrated) are reset via the reset button. Not in combination with plug-in units, insulated enclosure or main switch assembly kit for side panel mounting with mounting bracket. Rated ultimate short-circuit breaking capacity is determined by the fitted NZM2. If a switch-disconnector N2 is applied by the back-up fuse to be used → Technical data.
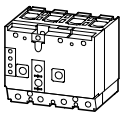	Rated fault current $I_{\Delta n}$ = 0.03 A	NZM2-4 N2-4	4 pole	**NZM2-4-XFIA30** 292345		1 off	
	Rated fault current $I_{\Delta n}$ 0.1 - 0.3 - 1 A, delay time t_v = 60 - 150 - 300 - 450 ms	NZM2-4 N2-4	4 pole	**NZM2-4-XFIA** 292346		1 off	

Notes [1] Suitable for use in three-phase systems

	For use with	Part no. Article no. when ordered with basic unit	Price see price list	Std. pack	Notes
Earth-fault release, 3-pole, 4-pole					
Not UL/CSA approved Not dependent on mains and control voltages I_g = 0.35 – 0.4 – 0.5 – 0.6 – 0.7 – 0.8 – 0.9 – 1.0 × I_n t_g = 0 – 20 – 60 – 100 – 200 – 300 – 500 – 750 – 1000 ms	NZM3 NS3	**+NZM3-XT** 260756		1 off	Only suitable for use in conjunction with circuit-breakers having electronic releases. Cannot be used in conjunction with NZM...-ME... remote operator. Display of the earth-fault in optional DMI communication module.
	NZM3-4	**+NZM3-4-XT** 260757			
	NZM4 NS4	**+NZM4-XT** 266721			
	NZM4-4	**+NZM4-4-XT** 266722			

	Description	Part no. Article no.	Price see price list	Std. pack	Notes
Residual current relay					
Pulse-current sensitive Rated control supply voltage: U_s = 230 V AC (50/60Hz) Integrated auxiliary contact (1 C/O) Ring-type transformer must also be ordered. not UL/CSA approved					
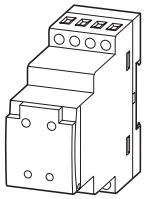	Rated fault current $I_{\triangle N}$ = 0.03 A	**PFR-003** 285555		1 off	
	Rated fault current $I_{\triangle N}$ = 0.3 A	**PFR-03** 285556			
	Rated fault current $I_{\triangle N}$ = 0.03 – 5 A Adjustable fault current and delay time Fault current early warning by flashing, red LED	**PFR-5** 285557			Adjustable fault current: 0.03, 0.1, 0.3, 0.5, 1, 3, 5 A Adjustable delay time: 0.02, 0.1, 0.3, 0.5, 1, 3, 5 A
Ring-type transformer					
Rated operational voltage: 690 V (50/60 Hz) not UL/CSA approved					
	Internal diameter: 20 mm	**PFR-W-20** 285558		1 off	incl. fixing clip for DIN rail mounting
	Internal diameter: 30 mm	**PFR-W-30** 285559			
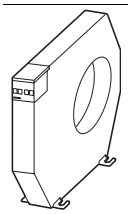	Internal diameter: 35 mm	**PFR-W-35** 285600			incl. screw fixing Alternative: fixing clip for DIN mounting rail **Design note:** The current transformer diameter must be selected 1.5 times larger than the envelope diameter of the passed through conductor.
	Internal diameter: 70 mm	**PFR-W-70** 285601			
	Internal diameter: 105 mm	**PFR-W-105** 285602			
	Internal diameter: 140 mm	**PFR-W-140** 285603			
	Internal diameter: 210 mm	**PFR-W-210** 285604			
Magnetic shielding					
not UL/CSA approved					
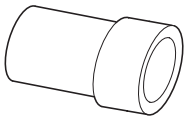	PFR-W-35	**PFR-WMA-35** 286001		1 off	Necessary for a load circuit with high inrush currents > 4 × I_n, such as for example motors and
	PFR-W-70	**PFR-WMA-70** 286002			
	PFR-W-105	**PFR-WMA-105** 286003			
	PFR-W-140	**PFR-WMA-140** 286004			
	PFR-W-210	**PFR-WMA-210** 286005			
Fixing clip					
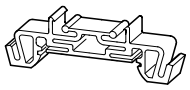	for the DIN rail mounting of the PFR-W-35 current transformer and all larger	**PFR-WC** 286006		1 off	1 set = 2 pieces

xEnergy **NZM, FAZ-B(C), PKZ** Moeller HPL0211-2007/2008 http://catalog.moeller.net

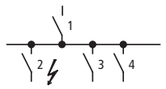

Incoming circuit-breaker

Outgoing circuit-breaker

Selectivity 415 V AC
between circuit-breakers enables separate shut-down of faulty system sections.

Selectivity (discrimination) exists between incoming breaker 1 and outgoing breaker 2 if, **only** outgoing breaker 2 trips at position 2 during a short-circuit.
System sections 3 and 4 continue to operate.

			Incoming circuit-breaker (S1)															
			NZM...1-A...							**NZM...2-A...**								
	I_{cu} [kA]		25(36)(50)(100)							25(36)(50)(150)								
	I_n [A]		20...40	50	63	80	100	125	160	20...40	50	63	80	100	125	160	200	250
Outgoing circuit-breaker (S2)	I_n [A]	$I_{cu(415V)}$ [kA]	Selectivity threshold I_s [kA] for selectivity between S2 and S1, overload and short-circuit release set to max. value															
FAZ–B(C)	0.5	15	T	T	T	T	T	T	T	T	T	T	T	T	T	T	T	T
	1	15	T	T	T	T	T	T	T	T	T	T	T	T	T	T	T	T
	2	15	2	T	T	T	T	T	T	3	T	T	T	T	T	T	T	T
	3	15	1.2	2	3	3	10	T	T	1.5	1.5	3	5	T	T	T	T	T
	4	15	1.2	2	3	3	8	T	T	1.2	1.5	3	4	T	T	T	T	T
	6	15	1.2	2	2.5	3	5	10	10	1.2	1.5	2.5	3	T	T	T	T	T
	10	15	1.2	1.5	2	2	4	10	10	1	1.5	2.5	3	10	10	10	10	10
	13	15	1	1.5	2	2	4	10	10	1	1.2	2	3	10	10	10	10	10
	16	15	1	1.2	1.5	2	3	8	8	1	1.2	1.5	2.5	10	10	10	10	10
	20	15	0.8	1.2	1.5	1.5	3	8	8	1	1.2	1.5	2.5	10	10	10	10	10
	25	15	0.7	1.2	1.5	1.5	3	7	7	0.8	1	1.5	2	10	10	10	10	10
	32	15	–	1.2	1	1.5	2	6	6	–	1	1.5	2	8	8	8	8	10
	40	15	–	–	1	1.5	2	5	5	–	–	1.2	1.5	7	7	7	7	10
	50	15	–	–	–	1.2	1.5	4	4	–	–	–	1.5	6	6	6	6	10
	63	15	–	–	–	–	1.5	3	3	–	–	–	–	6	6	6	6	10
PKZM0-...	0.16	100	T	T	T	T	T	T	T	T	T	T	T	T	T	T	T	T
	0.25	100	T	T	T	T	T	T	T	T	T	T	T	T	T	T	T	T
	0.4	100	T	T	T	T	T	T	T	T	T	T	T	T	T	T	T	T
	0.63	100	T	T	T	T	T	T	T	T	T	T	T	T	T	T	T	T
	1	100	T	T	T	T	T	T	T	T	T	T	T	T	T	T	T	T
	1.6	100	T	T	T	T	T	T	T	T	T	T	T	T	T	T	T	T
	2.5	100	T	T	T	T	T	T	T	T	T	T	T	T	T	T	T	T
	4	100	T	T	T	T	T	T	T	T	T	T	T	T	T	T	T	T
	6.3	100	4	5	5	T	T	T	T	2	3	4	5	T	T	T	T	T
	10	100	3	4	5	6	25	T	T	1.5	2.5	4	4	T	T	T	T	T
	12	50	3	4	5	6	25	T	T	1.5	2.5	4	4	T	T	T	T	T
	16	50	1.5	1.5	2	3	5	7	T	1	1.6	2	2.5	T	T	T	T	T
	20	50	0.8	1.5	1.5	2	3	5	T	0.8	1.2	1.5	2	T	T	T	T	T
	25	50	–	1	1.5	1.5	2.5	4	T	–	1	1.5	2	10	T	T	T	T
	32	50	–	–	1	1	2	3.5	T	–	–	1	1.5	8	40	T	T	T
PKZ2/ZM-...	0.6	100	T	T	T	T	T	T	T	T	T	T	T	T	T	T	T	T
	1.0	100	T	T	T	T	T	T	T	T	T	T	T	T	T	T	T	T
	1.6	100	T	T	T	T	T	T	T	T	T	T	T	T	T	T	T	T
	2.4	100	1.2	2	2.5	10	T	T	T	1.2	2	2.5	10	T	T	T	T	T
	4	100	1	1.5	2	2.5	2.5	4	10	1	1.5	2	2.5	2.5	10	10	10	T
	6	100	0.6	0.8	1	1.2	2	3	8	0.6	0.8	1	1.2	2	8	8	8	10
	10	100	0.5	0.7	0.8	1	1.2	2	4	0.5	0.7	0.8	1	1.2	4	4	4	5
	16	100	0.5	0.6	0.7	0.8	1.2	1.5	3	0.5	0.6	0.7	0.8	1.2	3	3	3	4
	25	30	–	0.6	0.7	0.7	1.2	1.5	2	–	0.6	0.7	0.7	1.2	2	2	2	3
	32	30	–	–	0.6	0.7	1.2	1.5	2	–	–	0.6	0.7	1.2	2	2	2	3
	40	30	–	–	0.6	0.7	1	1.5	2	–	–	0.6	0.7	1	2	2	2	2
PKZM4	16	100	0.5	0.8	0.8	0.8	2	5	5	0.5	0.8	0.8	0.8	2	5	5	5	5
	25	100	–	0.7	0.8	0.8	1.5	5	5	–	0.7	0.8	0.8	1.5	5	5	5	5
	32	50	–	–	0.8	0.8	1.5	4	4	–	–	0.8	0.8	1.5	4	4	4	4
	40	50	–	–	–	0.8	1.5	3	3	–	–	–	0.8	1.5	3	3	3	3
	50	50	–	–	–	–	1	2.5	2.5	–	–	–	–	1	2.5	2.5	2.5	2.5
	58	50	–	–	–	–	–	2.5	2.5	–	–	–	–	–	2.5	2.5	2.5	2.5
	63	50	–	–	–	–	–	2	2	–	–	–	–	–	2	2	2	2

Notes T: full selectivity

http://catalog.moeller.net Moeller HPL0211-2007/2008 **NZM, FAZ-B(C), PKZ** xEnergy

			Incoming circuit-breaker (S1)																					
			NZM...2-VE...			**NZM...3-AE...**			**NZM...3-VE...**			**NZM...4-AE...**					**NZM...4-VE...**				
	I_{cu} [kA]		50(150)			50(150)			50(150)			50(85)					50(85)				
	I_n [A]		100	160	250	250	400	630	250	400	630	630	800	1000	1250	1600	630	800	1000	1250	1600
Outgoing circuit-breaker (S2)	I_n [A]	$I_{cu(415V)}$ [kA]	Selectivity threshold I_s [kA] for selectivity between S2 and S1, overload and short-circuit release set to max. value																		
FAZ–B(C)	0.5	15	T	T	T	T	T	T	T	T	T	T	T	T	T	T	T	T	T	T	T
	1	15	T	T	T	T	T	T	T	T	T	T	T	T	T	T	T	T	T	T	T
	2	15	T	T	T	T	T	T	T	T	T	T	T	T	T	T	T	T	T	T	T
	3	15	T	T	T	T	T	T	T	T	T	T	T	T	T	T	T	T	T	T	T
	4	15	T	T	T	T	T	T	T	T	T	T	T	T	T	T	T	T	T	T	T
	6	15	T	T	T	T	T	T	T	T	T	T	T	T	T	T	T	T	T	T	T
	10	15	10	10	10	T	T	T	T	T	T	T	T	T	T	T	T	T	T	T	T
	13	15	10	10	10	T	T	T	T	T	T	T	T	T	T	T	T	T	T	T	T
	16	15	10	10	10	T	T	T	T	T	T	T	T	T	T	T	T	T	T	T	T
	20	15	10	10	10	T	T	T	T	T	T	T	T	T	T	T	T	T	T	T	T
	25	15	10	10	10	T	T	T	T	T	T	T	T	T	T	T	T	T	T	T	T
	32	15	8	8	10	T	T	T	T	T	T	T	T	T	T	T	T	T	T	T	T
	40	15	7	7	10	T	T	T	T	T	T	T	T	T	T	T	T	T	T	T	T
	50	15	6	6	10	T	T	T	T	T	T	T	T	T	T	T	T	T	T	T	T
	63	15	6	6	10	T	T	T	T	T	T	T	T	T	T	T	T	T	T	T	T
PKZM0-...	0.16	100	T	T	T	T	T	T	T	T	T	T	T	T	T	T	T	T	T	T	T
	0.25	100	T	T	T	T	T	T	T	T	T	T	T	T	T	T	T	T	T	T	T
	0.4	100	T	T	T	T	T	T	T	T	T	T	T	T	T	T	T	T	T	T	T
	0.63	100	T	T	T	T	T	T	T	T	T	T	T	T	T	T	T	T	T	T	T
	1	100	T	T	T	T	T	T	T	T	T	T	T	T	T	T	T	T	T	T	T
	1.6	100	T	T	T	T	T	T	T	T	T	T	T	T	T	T	T	T	T	T	T
	2.5	100	T	T	T	T	T	T	T	T	T	T	T	T	T	T	T	T	T	T	T
	4	100	T	T	T	T	T	T	T	T	T	T	T	T	T	T	T	T	T	T	T
	6.3	100	T	T	T	T	T	T	T	T	T	T	T	T	T	T	T	T	T	T	T
	10	100	T	T	T	T	T	T	T	T	T	T	T	T	T	T	T	T	T	T	T
	12	50	T	T	T	T	T	T	T	T	T	T	T	T	T	T	T	T	T	T	T
	16	50	T	T	T	T	T	T	T	T	T	T	T	T	T	T	T	T	T	T	T
	20	50	T	T	T	T	T	T	T	T	T	T	T	T	T	T	T	T	T	T	T
	25	50	10	T	T	T	T	T	T	T	T	T	T	T	T	T	T	T	T	T	T
	32	50	8	T	T	T	T	T	T	T	T	T	T	T	T	T	T	T	T	T	T
PKZ2/ZM-...	0.6	100	T	T	T	T	T	T	T	T	T	T	T	T	T	T	T	T	T	T	T
	1.0	100	T	T	T	T	T	T	T	T	T	T	T	T	T	T	T	T	T	T	T
	1.6	100	T	T	T	T	T	T	T	T	T	T	T	T	T	T	T	T	T	T	T
	2.4	100	T	T	T	T	T	T	T	T	T	T	T	T	T	T	T	T	T	T	T
	4	100	10	10	T	T	T	T	T	T	T	T	T	T	T	T	T	T	T	T	T
	6	100	8	8	T	T	T	T	T	T	T	T	T	T	T	T	T	T	T	T	T
	10	100	4	4	5	5	13	T	5	13	T	T	T	T	T	T	T	T	T	T	T
	16	100	3	3	4	4	7	T	4	7	T	T	T	T	T	T	T	T	T	T	T
	25	30	2	2	3	3	5	20	3	5	20	T	T	T	T	T	T	T	T	T	T
	32	30	2	2	3	3	3.5	15	3	3.5	15	T	T	T	T	T	T	T	T	T	T
	40	30	2	2	2.5	2.5	3.5	15	2.5	3.5	15	T	T	T	T	T	T	T	T	T	T
PKZM4	16	100	5	5	6	6	16	45	6	16	45	45	T	T	T	T	45	T	T	T	T
	25	100	5	5	3.3	3.3	10	25	3.3	10	25	25	42	T	T	T	25	42	T	T	T
	32	50	4	4	3	3	8	18	3	8	18	18	30	45	T	T	18	30	45	T	T
	40	50	3	3	3	3	8	18	3	8	18	18	30	45	T	T	18	30	45	T	T
	50	50	2.5	2.5	3	3	8	18	3	8	18	18	30	45	T	T	18	30	45	T	T
	58	50	2.5	2.5	2.5	2.5	6.5	15	2.5	6.5	15	15	25	40	T	T	15	25	40	T	T
	63	50	2	2	2.5	2.5	6.5	15	2.5	6.5	15	15	25	40	T	T	15	25	40	T	T

xEnergy **NZM** Moeller HPL0211-2007/2008 http://catalog.moeller.net

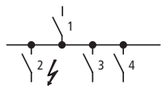

Incoming circuit-breaker

Outgoing circuit-breaker

Selectivity 415 V AC
between circuit-breakers enables separate shut-down of faulty system sections.
Selectivity (discrimination) exists between incoming breaker 1 and outgoing breaker 2 if,
only outgoing breaker 2 trips at position 2 during a short-circuit.
System sections 3 and 4 continue to be operational.

			Incoming circuit-breaker (S1)																
			NZM...1-A...							NZM...2-A...									
	I_{cu}[kA]		25(36)(50)(100)							25(36)(50)(150)									
	I_n[A]		20...40	50	63	80	100	125	160	20...40	50	63	80	100	125	160	200	250
Outgoing circuit-breaker (S2)	I_n [A]	$I_{cu(415V)}$ [kA]	Prospective short-circuit current (kA). Set the overload and short-circuit release of the incoming circuit-breaker to the max. value.															
NZM...1-A...	20...40	25...10	–	–	0.5	0.7	0.8	1.5	1.5	–	–	0.6	0.8	1.5	1.5	1.5	2	3
	50	25...10	–	–	–	0.6	0.8	1.5	1.5	–	–	–	0.8	1.5	1.5	1.5	2	3
	63	25...10	–	–	–	–	0.8	1.5	1.5	–	–	–	–	1.5	1.5	1.5	2	3
	80	25...10	–	–	–	–	–	1.5	1.5	–	–	–	–	–	1.5	1.5	2	3
	100	25...10	–	–	–	–	–	–	1.5	–	–	–	–	–	–	1.5	2	3
	125	25...10	–	–	–	–	–	–	–	–	–	–	–	–	–	–	2	3
	160	25...10	–	–	–	–	–	–	–	–	–	–	–	–	–	–	2	3
NZM...2-A...	20...40	25...15	–	–	0.5	0.6	0.8	1	1	–	–	0.5	0.6	0.8	1	1.2	1.6	2
	50	25...15	–	–	–	0.6	0.8	1	1	–	–	–	0.6	0.8	1	1.2	1.6	2
	63	25...15	–	–	–	–	0.8	1	1	–	–	–	–	0.8	1	1.2	1.6	2
	80	25...15	–	–	–	–	–	1	1	–	–	–	–	–	1	1.2	1.6	2
	100	25...15	–	–	–	–	–	–	1	–	–	–	–	–	–	1.2	1.6	2
	125	25...15	–	–	–	–	–	–	–	–	–	–	–	–	–	–	1.6	2
	160	25...15	–	–	–	–	–	–	–	–	–	–	–	–	–	–	–	2
	200	25...15	–	–	–	–	–	–	–	–	–	–	–	–	–	–	–	–
	250	25...15	–	–	–	–	–	–	–	–	–	–	–	–	–	–	–	–
NZM...1-M...	40	25...50	–	–	–	–	0.8	1	1	–	–	–	–	0.8	1	1.2	1.6	2
	50	25...50	–	–	–	–	–	–	1	–	–	–	–	–	–	1.2	1.6	2
	63	25...50	–	–	–	–	–	–	1	–	–	–	–	–	–	1.2	1.6	2
	80	25...50	–	–	–	–	–	–	–	–	–	–	–	–	–	–	1.6	2
	100	25...50	–	–	–	–	–	–	–	–	–	–	–	–	–	–	–	2
NZM...2-M...	20...12	25...15	–	–	–	–	–	–	–	–	–	–	–	–	–	–	–	–
	160	25...15	–	–	–	–	–	–	–	–	–	–	–	–	–	–	–	–
	200	25...15	–	–	–	–	–	–	–	–	–	–	–	–	–	–	–	–
NZM...2-VE...	100	50...15	–	–	–	–	–	–	–	–	–	–	–	–	–	1.2	1.6	2
	160	50...15	–	–	–	–	–	–	–	–	–	–	–	–	–	–	–	–
	250	50...15	–	–	–	–	–	–	–	–	–	–	–	–	–	–	–	–
NZM...2-ME...	90	50...15	–	–	–	–	–	–	–	–	–	–	–	–	–	1.2	1.6	2
	140	50...15	–	–	–	–	–	–	–	–	–	–	–	–	–	–	–	–
	220	50...15	–	–	–	–	–	–	–	–	–	–	–	–	–	–	–	–
NZM...3-AE...	250	50...15	–	–	–	–	–	–	–	–	–	–	–	–	–	–	–	–
	400	50...15	–	–	–	–	–	–	–	–	–	–	–	–	–	–	–	–
	630	50...15	–	–	–	–	–	–	–	–	–	–	–	–	–	–	–	–
NZM...3-VE...	250	50...15	–	–	–	–	–	–	–	–	–	–	–	–	–	–	–	–
	400	50...15	–	–	–	–	–	–	–	–	–	–	–	–	–	–	–	–
	630	50...15	–	–	–	–	–	–	–	–	–	–	–	–	–	–	–	–
NZM...3-ME...	220	50...15	–	–	–	–	–	–	–	–	–	–	–	–	–	–	–	–
	350	50...15	–	–	–	–	–	–	–	–	–	–	–	–	–	–	–	–
	450	50...15	–	–	–	–	–	–	–	–	–	–	–	–	–	–	–	–
NZM...4-AE...	630	50...10	–	–	–	–	–	–	–	–	–	–	–	–	–	–	–	–
	800	50...10	–	–	–	–	–	–	–	–	–	–	–	–	–	–	–	–
	1000	50...10	–	–	–	–	–	–	–	–	–	–	–	–	–	–	–	–
	1250	50...10	–	–	–	–	–	–	–	–	–	–	–	–	–	–	–	–
	1600	50...10	–	–	–	–	–	–	–	–	–	–	–	–	–	–	–	–
NZM...4-VE...	630	50...10	–	–	–	–	–	–	–	–	–	–	–	–	–	–	–	–
	800	50...10	–	–	–	–	–	–	–	–	–	–	–	–	–	–	–	–
	1000	50...10	–	–	–	–	–	–	–	–	–	–	–	–	–	–	–	–
	1250	50...10	–	–	–	–	–	–	–	–	–	–	–	–	–	–	–	–
	1600	50...10	–	–	–	–	–	–	–	–	–	–	–	–	–	–	–	–
NZM...4-ME...	550	50...10	–	–	–	–	–	–	–	–	–	–	–	–	–	–	–	–
	875	50...10	–	–	–	–	–	–	–	–	–	–	–	–	–	–	–	–
	1400	50...10	–	–	–	–	–	–	–	–	–	–	–	–	–	–	–	–

Notes T: total selectivity

http://catalog.moeller.net Moeller HPL0211-2007/2008 **NZM** xEnergy

Incoming circuit-breaker (S1)																					
NZM...2-VE...			NZM...3-AE...			NZM...3-VE...			NZM...4-AE...					NZM...4-VE...				
50(150)			50(150)			50(150)			50(85)					50(85)				
100	160	250	250	400	630	250	400	630	630	800	1000	1250	1600	630	800	1000	1250	1600
Prospective short-circuit current (kA). Set the overload and short-circuit release of the incoming circuit-breaker to the max. value.																		
2	5	7.5	7.5	20	20	12.5	25	25	T	T	T	T	T	T	T	T	T	T
2	5	7.5	7.5	20	20	12.5	25	25	T	T	T	T	T	T	T	T	T	T
2	5	6	6	15	15	11	20	20	T	T	T	T	T	T	T	T	T	T
–	5	6	6	15	15	11	20	20	T	T	T	T	T	T	T	T	T	T
–	5	6	6	15	15	11	20	20	T	T	T	T	T	T	T	T	T	T
–	5	6	6	15	15	11	20	20	T	T	T	T	T	T	T	T	T	T
–	5	6	6	15	15	11	20	20	T	T	T	T	T	T	T	T	T	T
1	2	4	6	15	15	11	20	20	T	T	T	T	T	T	T	T	T	T
1	2	4	6	15	15	11	20	20	T	T	T	T	T	T	T	T	T	T
1	2	4	6	15	15	11	20	20	T	T	T	T	T	T	T	T	T	T
–	2	4	6	15	15	11	20	20	T	T	T	T	T	T	T	T	T	T
–	2	4	6	15	15	11	20	20	T	T	T	T	T	T	T	T	T	T
–	–	4	6	15	15	11	20	20	T	T	T	T	T	T	T	T	T	T
–	–	4	5	10	10	10	15	15	T	T	T	T	T	T	T	T	T	T
–	–	–	–	10	10	–	15	15	T	T	T	T	T	T	T	T	T	T
–	–	–	–	10	10	–	15	15	T	T	T	T	T	T	T	T	T	T
1	2	4	6	15	15	11	20	20	T	T	T	T	T	T	T	T	T	T
–	2	4	6	15	15	11	20	20	T	T	T	T	T	T	T	T	T	T
–	2	4	6	15	15	11	20	20	T	T	T	T	T	T	T	T	T	T
–	2	4	6	15	15	11	20	20	T	T	T	T	T	T	T	T	T	T
–	–	4	6	15	15	11	20	20	T	T	T	T	T	T	T	T	T	T
–	–	2	6	7	10	7	10	12	20	20	50	T	T	20	20	50	T	T
–	–	–	6	7	10	7	10	12	20	20	50	T	T	20	20	50	T	T
–	–	–	–	7	10	–	10	12	20	20	50	T	T	20	20	50	T	T
–	1.2	2	6	7	10	7	8	11	20	20	50	T	T	20	20	50	T	T
–	–	2	6	7	10	7	8	11	20	20	50	T	T	20	20	50	T	T
–	–	–	–	7	10	–	8	11	20	20	50	T	T	20	20	50	T	T
–	–	2	6	7	10	5	10	12	T	T	T	T	T	T	T	T	T	T
–	–	–	6	7	10	5	10	12	T	T	T	T	T	T	T	T	T	T
–	–	–	–	7	10	5	10	12	T	T	T	T	T	T	T	T	T	T
–	–	–	–	5	7.5	–	10	12	T/80	T/80	T/80	T/80	T/80	T/80	T/80	T/80	T/80	T/80
–	–	–	–	–	7.5	–	–	12	T/80	T/80	T/80	T/80	T/80	T/80	T/80	T/80	T/80	T/80
–	–	–	–	–	–	–	–	–	–	T/80	T/80	T/80	T/80	–	T/80	T/80	T/80	T/80
–	–	–	–	3.5	4	–	10	12	T/80	T/80	T/80	T/80	T/80	T/80	T/80	T/80	T/80	T/80
–	–	–	–	–	4	–	–	12	T/80	T/80	T/80	T/80	T/80	T/80	T/80	T/80	T/80	T/80
–	–	–	–	–	–	–	–	–	–	T/80	T/80	T/80	T/80	–	T/80	T/80	T/80	T/80
–	–	–	–	3.5	4	–	10	12	T/80	T/80	T/80	T/80	T/80	T/80	T/80	T/80	T/80	T/80
–	–	–	–	–	4	–	–	12	T/80	T/80	T/80	T/80	T/80	T/80	T/80	T/80	T/80	T/80
–	–	–	–	–	–	–	–	–	–	T/80	T/80	T/80	T/80	–	T/80	T/80	T/80	T/80
–	–	–	–	–	–	–	–	–	–	10	15	20	20	–	10	15	20	20
–	–	–	–	–	–	–	–	–	–	–	–	20	20	–	–	–	20	20
–	–	–	–	–	–	–	–	–	–	–	–	20	20	–	–	–	20	20
–	–	–	–	–	–	–	–	–	–	–	–	–	20	–	–	–	–	20
–	–	–	–	–	–	–	–	–	–	–	–	–	–	–	–	–	–	–
–	–	–	–	–	–	–	–	–	–	10	15	20	20	–	10	15	20	20
–	–	–	–	–	–	–	–	–	–	–	–	20	20	–	–	–	20	20
–	–	–	–	–	–	–	–	–	–	–	–	20	20	–	–	–	20	20
–	–	–	–	–	–	–	–	–	–	–	–	–	20	–	–	–	–	20
–	–	–	–	–	–	–	–	–	–	–	–	–	–	–	–	–	–	–
–	–	–	–	–	–	–	–	–	–	–	–	20	20	–	–	–	20	20
–	–	–	–	–	–	–	–	–	–	–	–	–	20	–	–	–	–	20
–	–	–	–	–	–	–	–	–	–	–	–	–	–	–	–	–	–	–

Protection of PVC insulated cables against thermal overload with short-circuits

According to VDE 0100 part 430 cables and conductors must be protected against short-circuit and overload. The overload protection is obtained by using NZM circuit-breakers with settable, current-dependent, delayed overload release.

Short-circuit protection is provided by adjustable instantaneous releases, which open the main contacts in less than 25 ms. The short-circuit total opening time restricts the temperature rise of the cable to a minimum.

The tables indicate the minimum conductor cross-section reliably protected by circuit-breakers during a short-circuit. (Operating voltage U_N = 415 V)

	Min. protected cross-section mm² copper
NZM...1(-4)-...20	6
NZM...1(-4)-...25 … 160	10
NZM...2(-4)-...20 … 250	10
NZM...3(-4)-...250 … 630	16
NZM...4(-4)-...630 … 1600	95

Back-up protection

between NZM(N)(H) incoming circuit-breaker and NZMB(N)(H) outgoing circuit-breaker

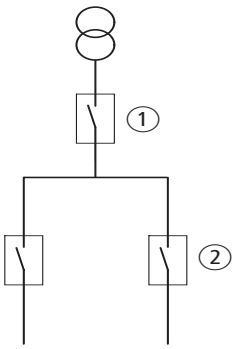

			Incoming circuit-breaker ①									
			NZM1				NZM2				NZM3	
		I_n	up to 160 A				up to 250 A				up to 630 A	
		$I_{cu(415\ V)}$	25 kA	36 kA	50 kA	100 kA	25 kA	36 kA	50 kA	150 kA	50 kA	150 kA
Outgoing circuit-breaker ②												
	$I_{cu(415\ V)}$	I_n										
NZMB1	25 kA	up to 160 A	25	36	50	100	25	36	50	100	50	100
NZMC1	36 kA	up to 160 A	–	36	50	100		36	50	100	50	100
NZMN1	50 kA	up to 160 A	–	–	50	100	–	–	50	100	50	100
NZMH1	100 kA	up to 160 A	–	–	–	100	–	–	–	100	–	100
NZMB2	25 kA	up to 250 A	25	36	50	100	25	36	50	150	50	150
NZMC2	36 kA	up to 250 A	–	36	50	100	–	36	50	150	50	150
NZMN2	50 kA	up to 250 A	–	–	50	100	–	–	50	150	50	150
NZMH2	150 kA	up to 250 A	–	–	–	–	–	–	–	150	–	150
NZMN3	50 kA	up to 630 A	–	–	–	–	–	–	–	–	50	150
NZMH3	150 kA	up to 630 A	–	–	–	–	–	–	–	–	–	150

Where the prospective fault current at the point of installation of circuit-breakers is very high, it is conventional to use NZMN(H) current-limiting circuit-breakers. An attractively priced alternative is to fit a NZMN(H) current-limiting circuit-breaker upstream of NZMB(C)(N) standard circuit-breakers, if the fault level is too high for NZMB(C)(N) switches.

The table shows which current-limiting circuit-breaker NZMN(H) in combination with NZMB(C)(N) are to be used to provide protection at the network locations with high short-circuit capacities.

The selectivity limit is determined by the response current of the non-delayed short-circuit release in the upstream incoming circuit-breaker. In many applications this is sufficient.

between NZM...1-A... incoming circuit-breaker and FAZ-B(C)/PLSM-B(C)... outgoing circuit-breaker

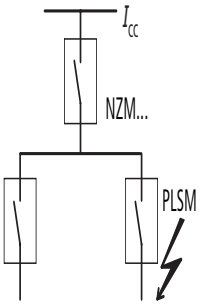

Outgoing circuit-breaker	Outgoing circuit-breaker NZM(B)(C)2-A...	NZMC(N)(H)1-A...
FAZ-B(C)...		
0,5 – 16	25 kA	30 kA
20 – 40	20 kA	20 kA
50, 63	15 kA	15 kA
PLSM-B(C)...(/...)		
0,5 – 16	25 kA	30 kA
20 – 40	20 kA	20 kA
50, 63	15 kA	15 kA

between NZM...2-A... incoming circuit-breaker and FAZ-B(C)/PLSM-B(C)... outgoing circuit-breaker

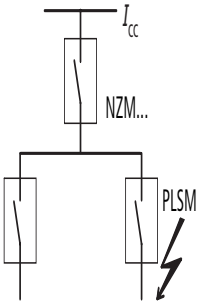

Outgoing circuit-breaker	Incoming circuit-breaker NZMB(C)2-A...	NZMN(H)2-A...
FAZ-B(C)...		
0,5 – 10	25 kA	50 kA
13 – 32	25 kA	30 kA
40 – 63	20 kA	20 kA
PLSM-B(C)...(/...)		
0,5 – 10	25 kA	50 kA
13 – 32	25 kA	30 kA
40 – 63	20 kA	20 kA

Direction of blow-out

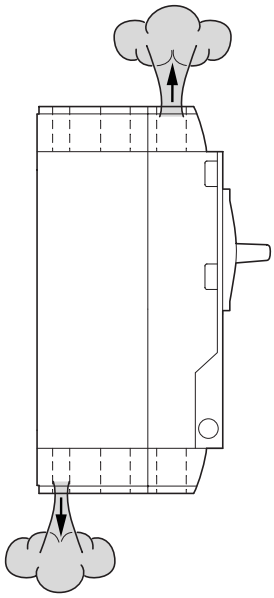

	Top, front	Bottom, rear
NZM1	X	–
NZM2[1)]	X	X
NZM3	X	X
NZM4	X	–

[1)] NZM B (C) – A … as NZM1

Minimum clearances

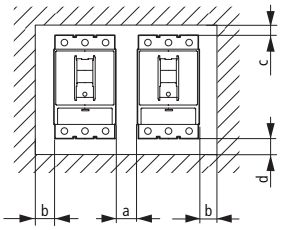

between two adjacently mounted switches
Minimum clearance a in mm

	NZM1	NZM2	NZM3	NZM4
NZM1	0	5	5	15
NZM2	5	5	5	15
NZM3	5	5	5	15
NZM4	15	15	15	15

between switch and other parts
Minimum clearances in mm

	b		c		d	
	≦ 690 V	1000 V	≦ 690 V	1000 V	≦ 690 V	1000 V
NZM1	0	–	60	–	0	–
NZM2[1)]	5	5	35	35	35	35
NZM3	5	5	60	60	60	60
NZM4	15	15	100	200	0	0

[1)] NZM B (C) – A … C= 60 mm, d = 0 mm

Dimensions

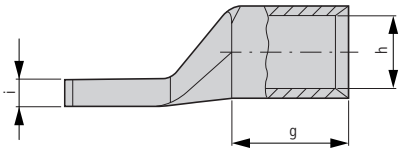

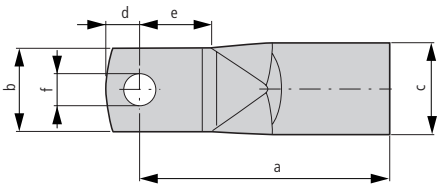

For pressing the cable lugs a press tool K22, HK60/22 or EK22
from the company Klauke is necessary with the following press inserts:
R22/95 for 95 mm²
R22/120 for 120 mm²
R22/150 for 150 mm²
R22/185 for 185 mm²
R22/240 for 240 mm²

Cable lug	For use with	Rated cross section	Terminal bolt	Dimensions in mm								
		mm²	∅	a	b	c	d	e	f	g	h	i
KS95-NZM7	NZM2	95	M8	53_{+2}	$23_{\pm0.5}$	$18_{\pm0.2}$	$10_{\pm1}$	19	8,5	25	13,5	4,4
KS120-NZM7	NZM2	120	M8	56_{+2}	$23_{\pm0.5}$	$19.5_{\pm0.2}$	$10_{\pm1}$	19	8,5	26	15	4,4
KS150-NZM7	NZM2	150	M8	61_{+2}	$23_{\pm0.5}$	$21_{\pm0.2}$	$10_{\pm1}$	19	8,5	30	16,5	4,4
NZM2-XKS185	NZM2	185	M8	$65_{\pm1.5}$	$22_{\pm1}$	$24_{\pm0.3}$	$9^{+1}_{-0,5}$	$19^{+2,5}_{-0,5}$	$8,5^{+0,05}_{-0,1}$	$30_{\pm2}$	$19_{\pm0.4}$	7
NZM3-XKS185	NZM3, NZM4	185	M10	65	24,5	24	11,5	18	10,5	30	19	$7.0_{\pm0.8}$
NZM3-XKS240	NZM3, NZM4	240	M10	72	31	26	11,5	19	10,5	35	21	$5.0_{\pm0.8}$

Front cut-out

Cut-out a
toggle lever

Cut-out b
rotary handle,
remote operator

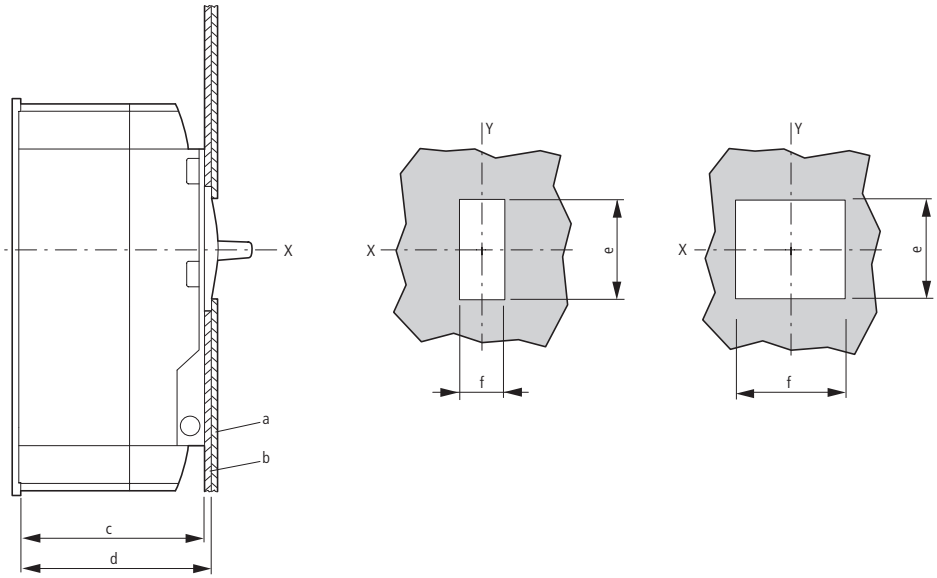

	Distance from mounting plate and door cutout		Cut-out a		Cut-out b	
	c mm	d mm	e mm	f mm	e mm	f mm
NZM1	68	73	40	23	46	91
NZM2	103	108	79	36	96	101
NZM3	120.5	125.5	79	36	96	136
NZM4	138	146	101	105	118	204

Standard auxiliary contact (HIN)

Early-make auxiliary contact (HIV)

Trip-indicating auxiliary contact (HIA)

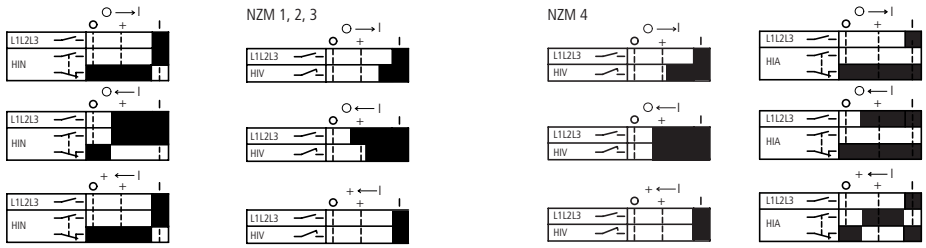

0 → I Switching on

0 ← I Switching off

+ ← I Trip

■ Contact closed

□ Contact open

Notes If early-make contacts are required in combination with shunt or undervoltage releases, please select the combination type in the "Release" section.

Interlocking variants and combination options

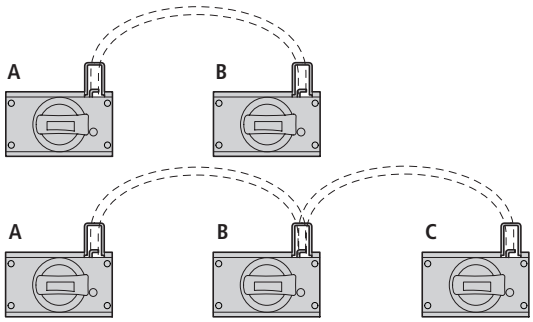

A	B
OFF	OFF
ON/TRIP	~~ON~~
~~ON~~	ON/TRIP

A	B	C
OFF	OFF	OFF
~~ON~~	ON/TRIP	~~ON~~
ON/TRIP	~~ON~~	ON/TRIP

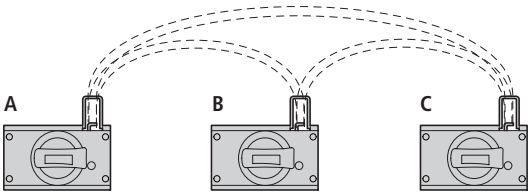

A	B	C
OFF	OFF	OFF
ON/TRIP	~~ON~~	~~ON~~
~~ON~~	ON/TRIP	~~ON~~
~~ON~~	~~ON~~	ON/TRIP

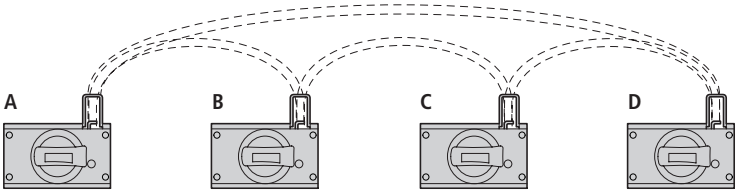

A	B	C	D
OFF	OFF	OFF	OFF
ON/TRIP	~~ON~~	ON/TRIP	~~ON~~
~~ON~~	ON/TRIP	~~ON~~	ON/TRIP

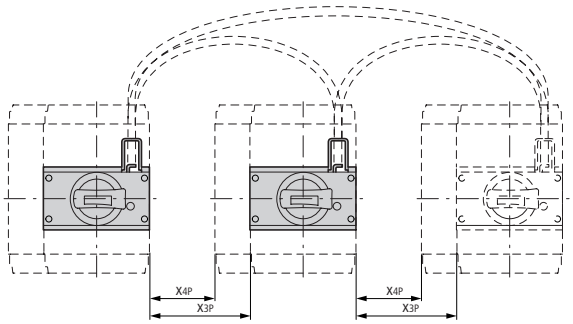

= Switch clearance 3 pole
= Switch clearance 4 pole

NZM-XBZ225						right switch			
max. switch clearance		NZM1		NZM2		NZM3		NZM4	
		X_{3P}	X_{4P}	X_{3P}	X_{4P}	X_{3P}	X_{4P}	X_{3P}	X_{4P}
left switch		mm	mm	mm	mm	mm	mm	mm	mm
NZM1	3/4 pole	135	105	120	85	135	90	125	80
NZM2	3/4 pole	135	105	120	85	135	90	125	80
NZM3	3/4 pole	90	75	75	35	85	40	80	45
NZM4	3/4 pole	50	35	40	15	25	–	15	–

NZM-XBZ600						right switch			
max. switch clearance		NZM1		NZM2		NZM3		NZM4	
		X_{3P}	X_{4P}	X_{3P}	X_{4P}	X_{3P}	X_{4P}	X_{3P}	X_{4P}
left switch		mm	mm	mm	mm	mm	mm	mm	mm
NZM1	3/4 pole	510	480	495	460	510	465	475	405
NZM2	3/4 pole	510	480	495	460	510	465	475	405
NZM3	3/4 pole	460	430	450	410	460	415	460	390
NZM4	3/4 pole	400	370	380	340	400	375	390	320

NZM-XBZ1000						right switch			
max. switch clearance		NZM1		NZM2		NZM3		NZM4	
		X_{3P}	X_{4P}	X_{3P}	X_{4P}	X_{3P}	X_{4P}	X_{3P}	X_{4P}
left switch		mm	mm	mm	mm	mm	mm	mm	mm
NZM1	3/4 pole	910	880	895	860	910	865	865	795
NZM2	3/4 pole	910	880	895	860	910	865	865	795
NZM3	3/4 pole	820	790	850	810	860	815	860	790
NZM4	3/4 pole	750	720	730	700	800	775	790	720

xEnergy NZM…-XMVR(L) Moeller HPL0211-2007/2008 http://catalog.moeller.net

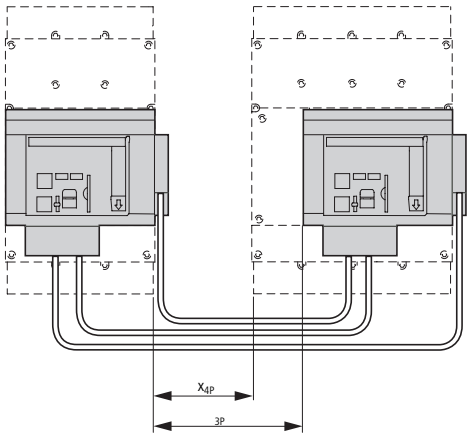

X_{3p} = max. switch clearance 3 pole
X_{4p} = max. switch clearance 4 pole

XMVR mechanical interlock
(Mounting adjacent)

NZM...-XMVR

Max. switch clearance right switch

		NZM2		NZM3		NZM4	
		X_{3p}	X_{4p}	X_{3p}	X_{4p}	X_{3p}	X_{4p}
left switch		mm	mm	mm	mm	mm	mm
NZM2	3/4 pole	130	95	95	50	–	–
NZM3	3/4 pole	–	–	135	90	155	85
NZM4	3/4 pole	–	–	–	–	120	50

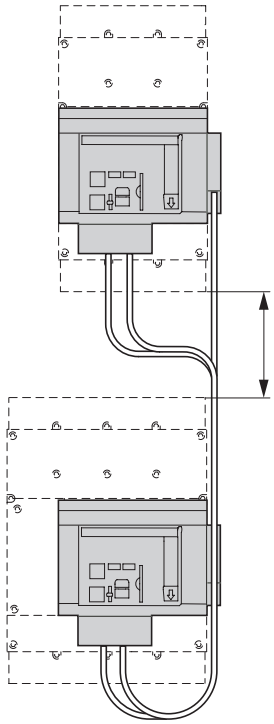

XMVRL mechanical interlock
Mounting in adjacent enclosures

NZM...-XMVRL

Max. switch clearance right switch

		NZM2		NZM3		NZM4	
		X_{3p}	X_{4p}	X_{3p}	X_{4p}	X_{3p}	X_{4p}
left switch		mm	mm	mm	mm	mm	mm
NZM2	3/4 pole	350	315	420	385	–	–
NZM3	3/4 pole	–	–	400	365	460	390
NZM4	3/4 pole	–	–	–	–	420	350

XMVRL mechanical interlock
(Mounting one above the other)

NZM…-XMVRL

Max. switch clearance Switch top

		NZM2	NZM3	NZM4
		3/4 pole	3/4 pole	3/4 pole
		Y	Y	Y
Switch bottom		mm	mm	mm
NZM2	3/4 pole	220	225	–
NZM3	3/4 pole	–	220	230
NZM4	3/4 pole	–	–	230

Y = max. switch clearance

Ring-type transformer

Maximum rated current [A]		Diameter	
Power distribution	**Motor/capacitor**	**Transformer part no. PFR-W-… d1**	**Max. conductor circumference (mm) d2**
50	50	20	13
150	100	30	20
150	100	35	23
400	200	70	47
600	250	105	70
1200	630	140	93
1800	800	210	140

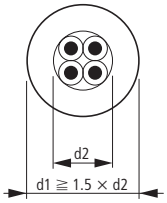

System and line protection with NZM1

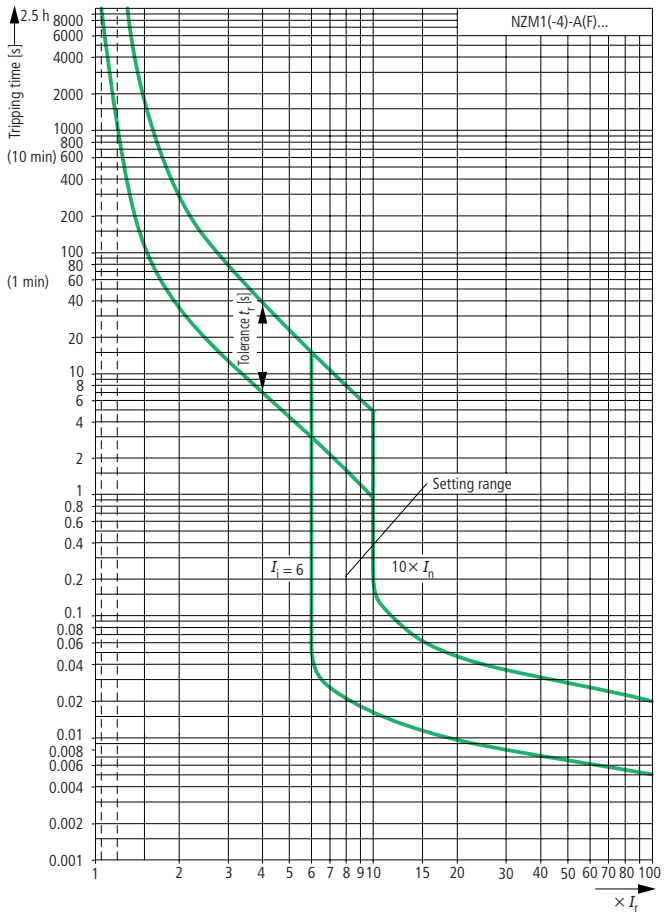

Motor protection with NZM1

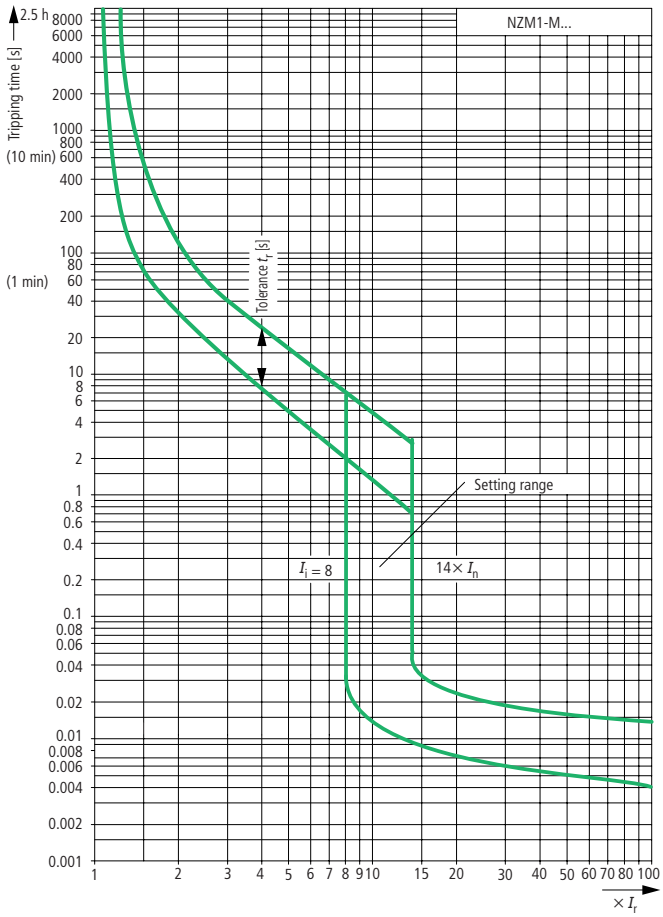

System and line protection with NZM2

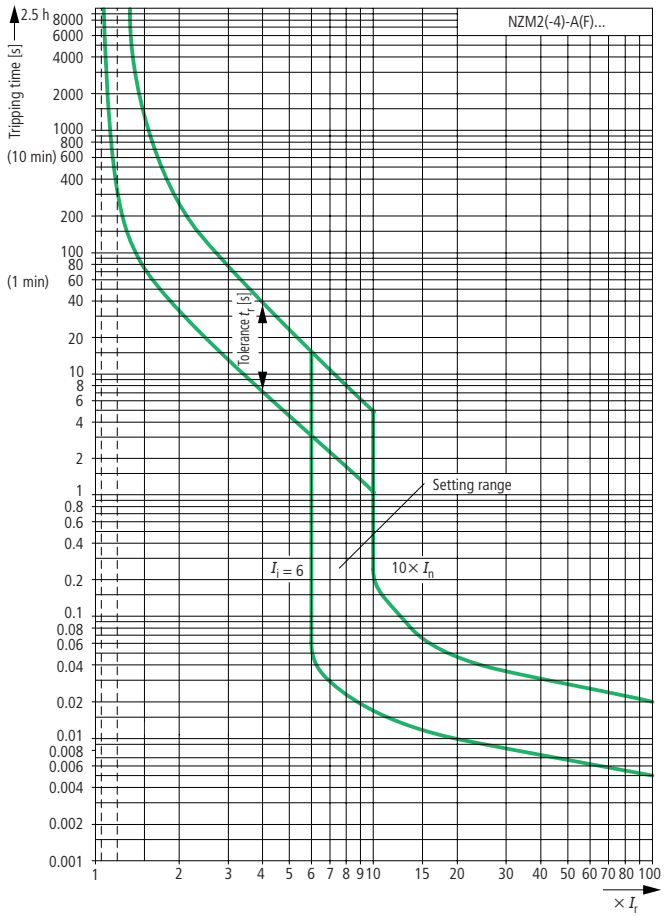

Motor protection with NZM2

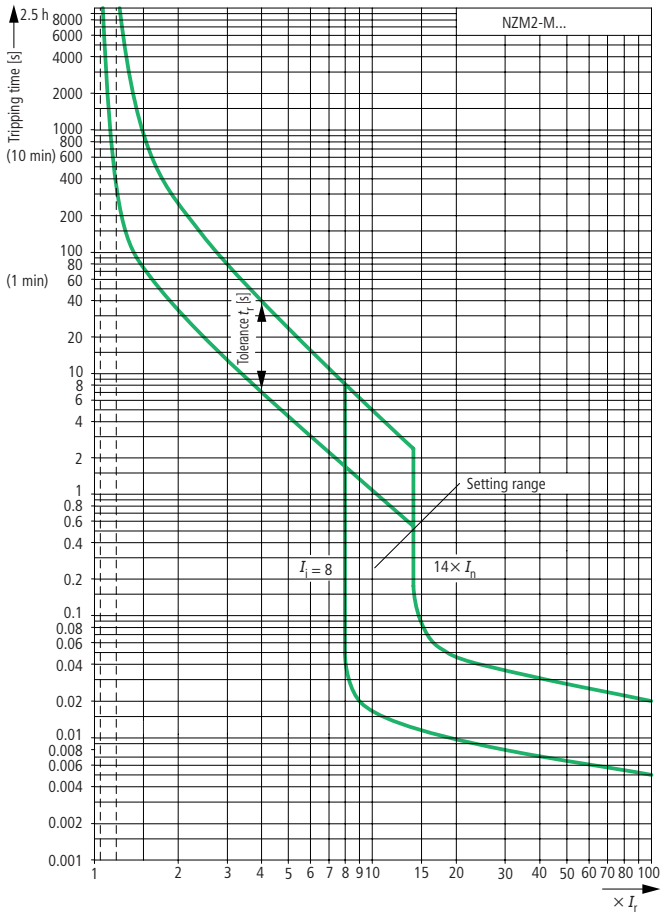

Systems, cable, selectivity and generator protection with NZM2

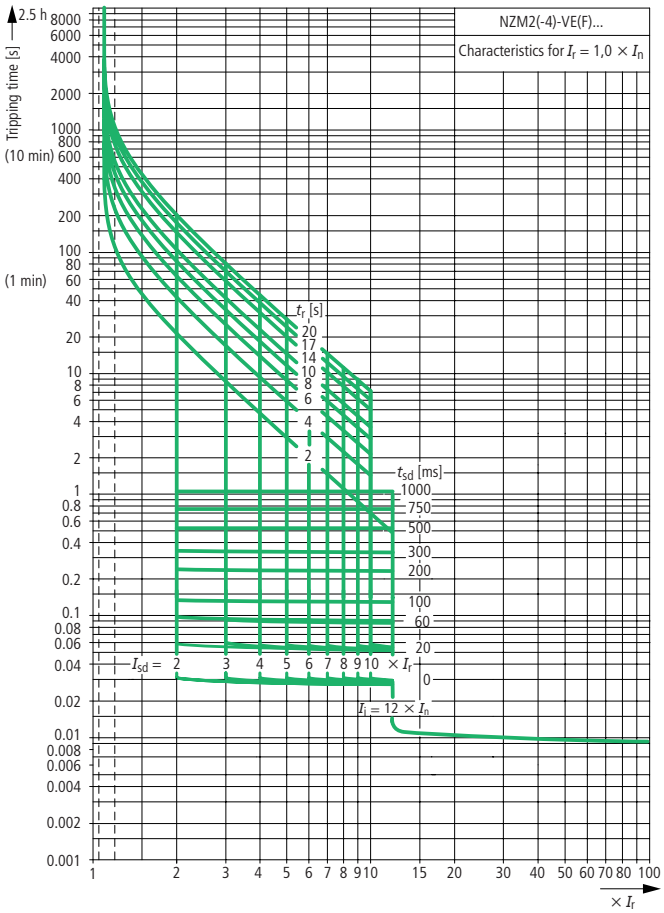

Motor protection with NZM2

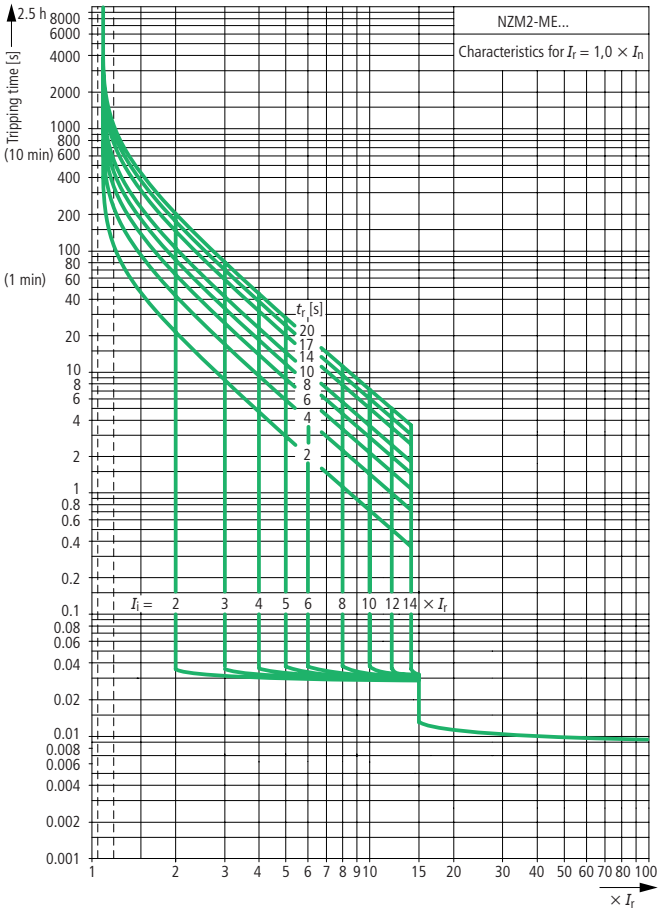

System and line protection with NZM3

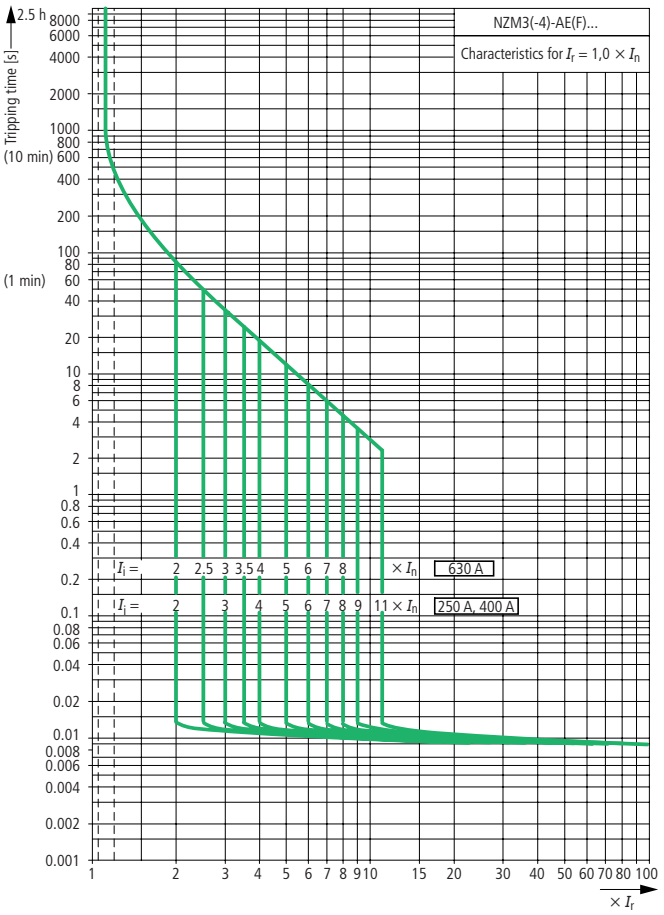

Systems, cable, selectivity and generator protection with NZM3

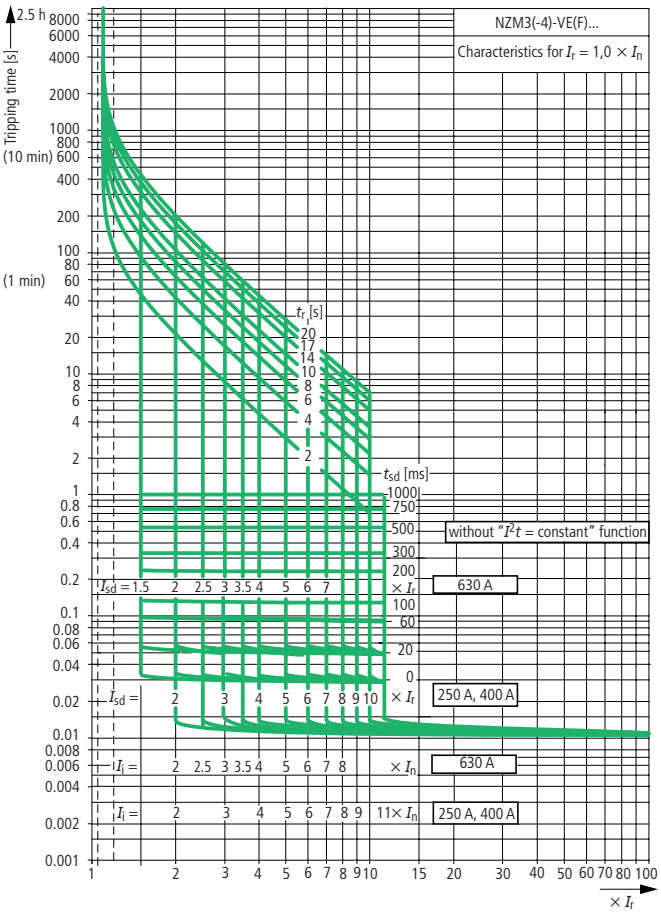

Systems, cable, selectivity and generator protection with NZM3

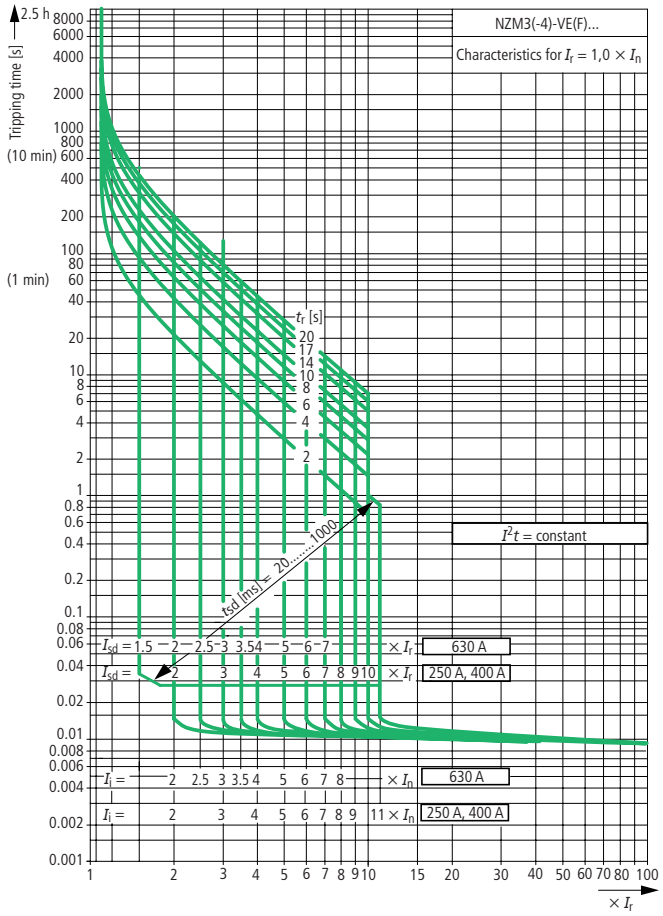

Motor protection with NZM3

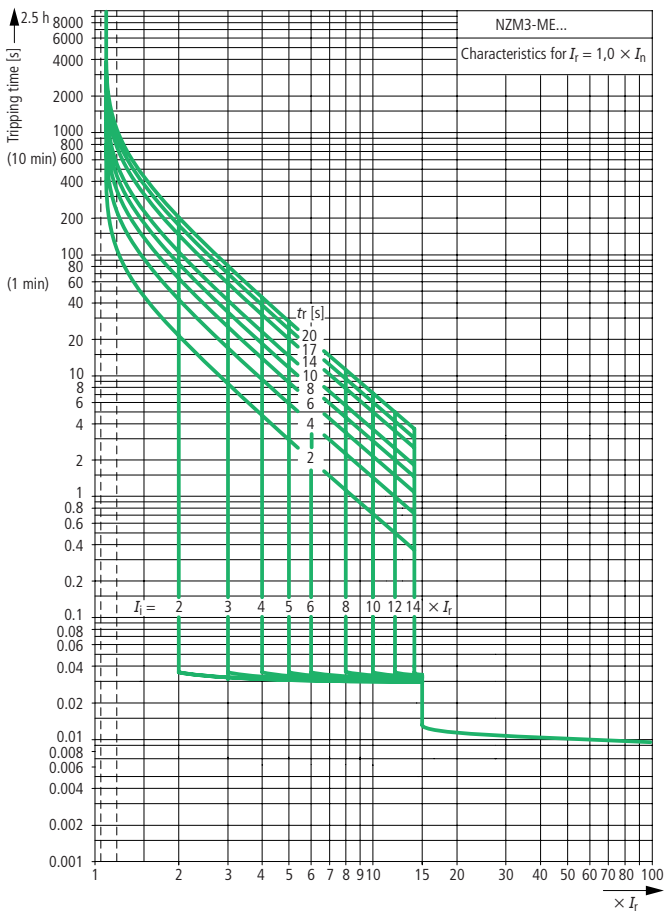

System and line protection with NZM4

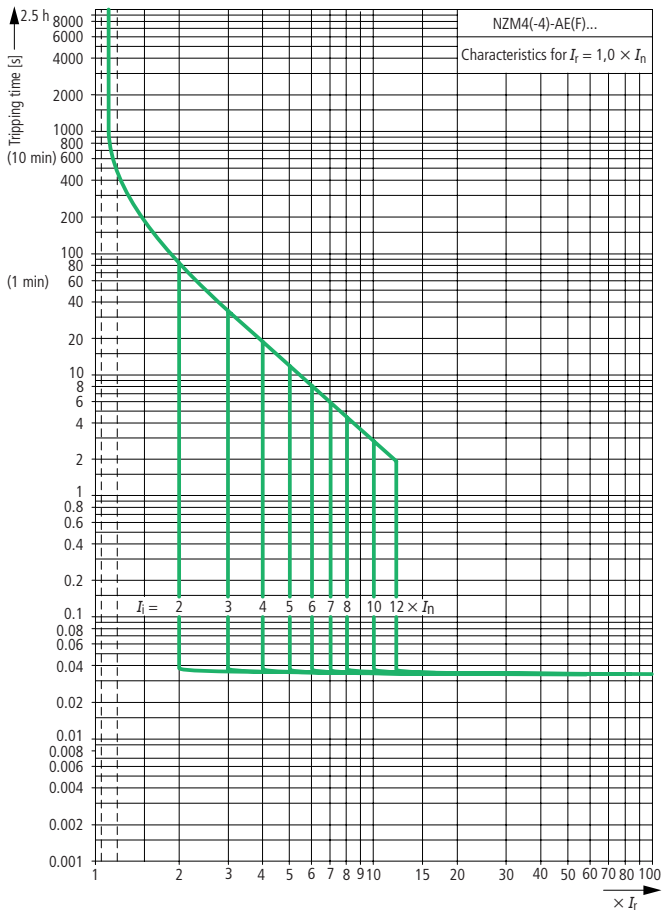

Systems, cable, selectivity and generator protection with NZM4

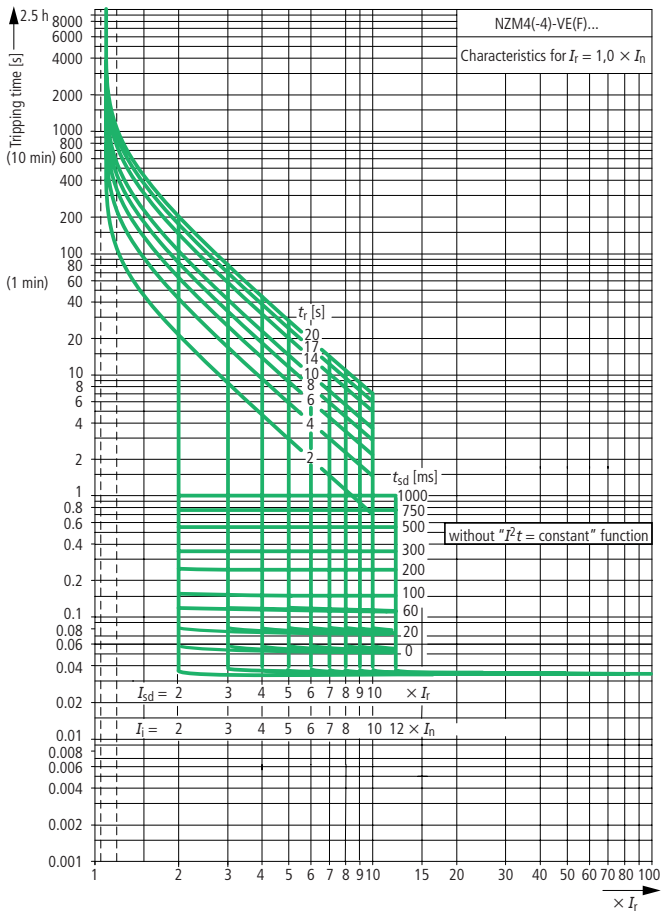

Systems, cable, selectivity and generator protection with NZM4

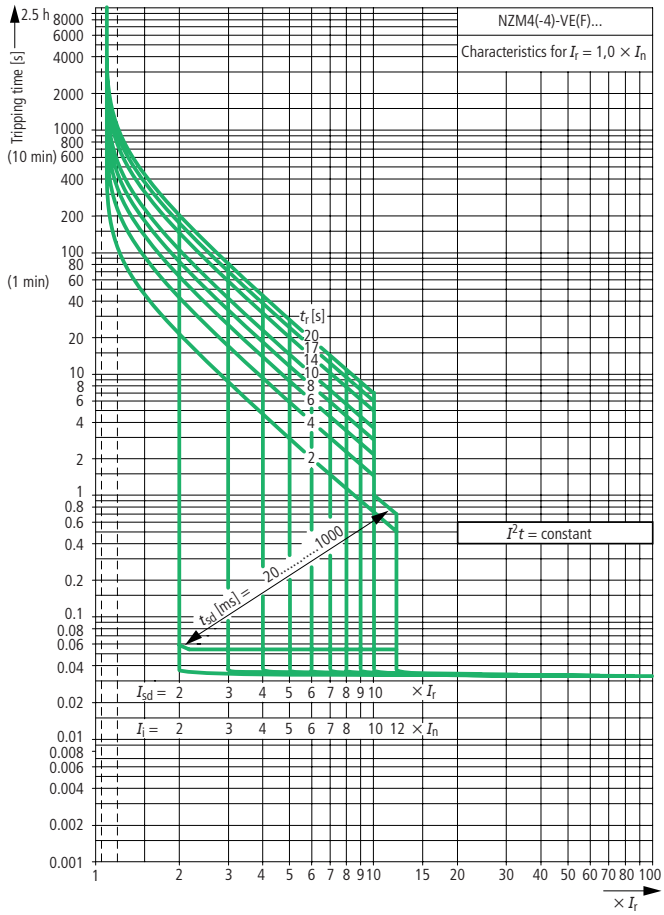

Systems, cable, selectivity and generator protection with NZM4, 2000 A

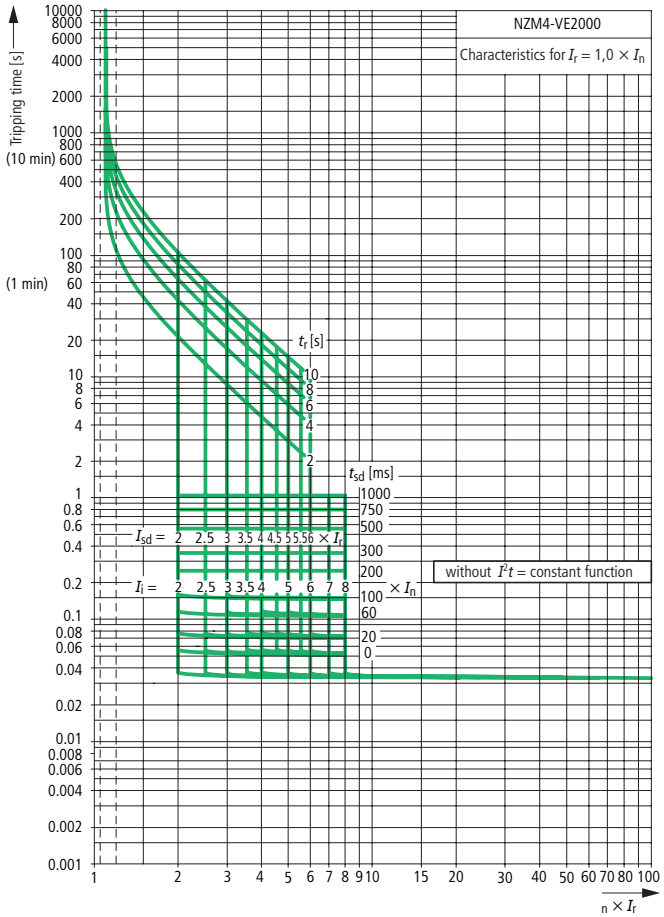

Systems, cable, selectivity and generator protection with NZM4, 2000 A

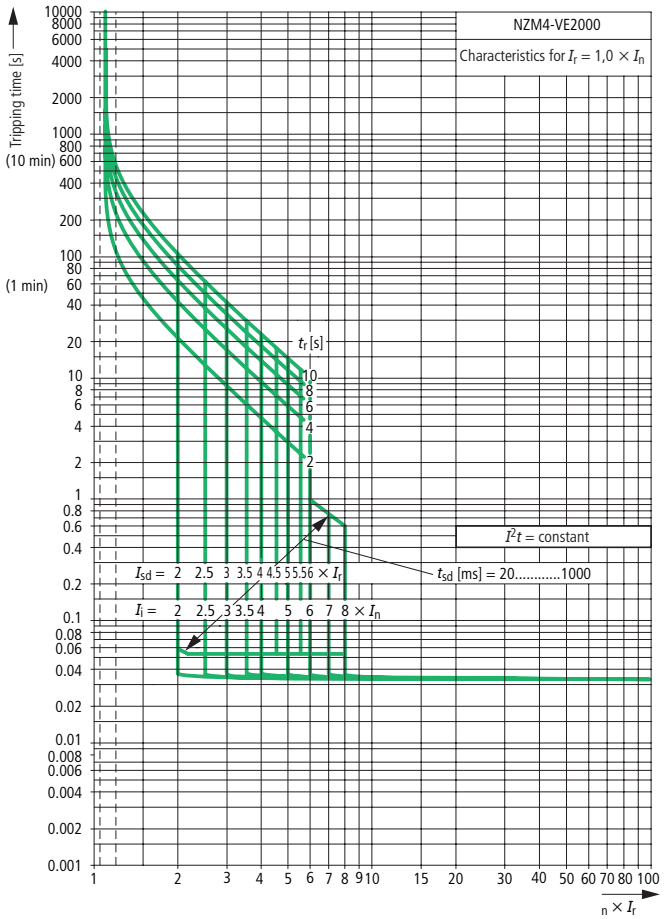

Motor protection with NZM4

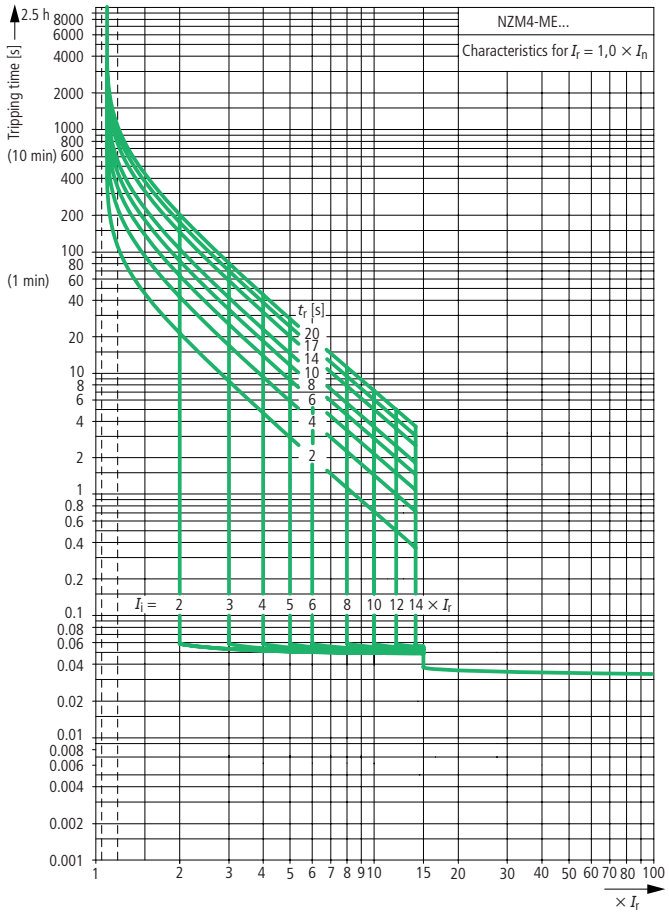

Let-through current $\hat{i}_D$

NZMC1

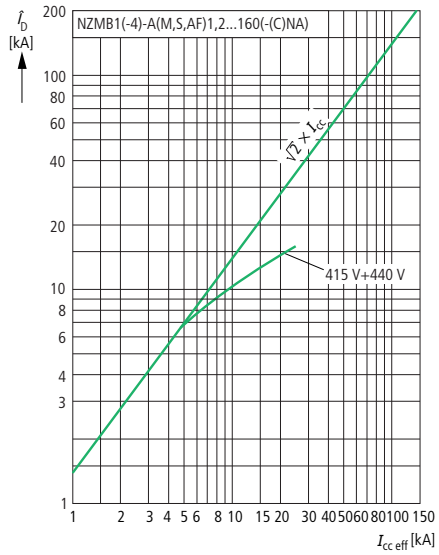

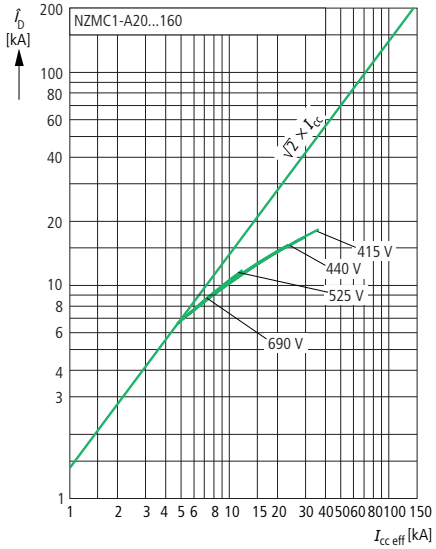

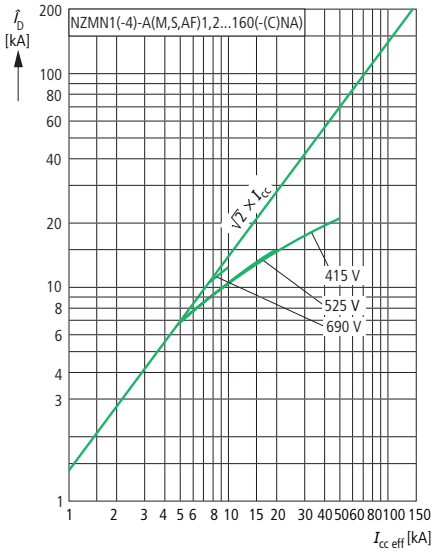

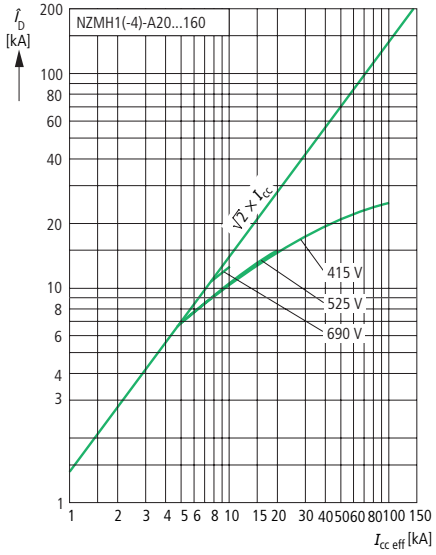

Let-through current $\hat{i}_D$

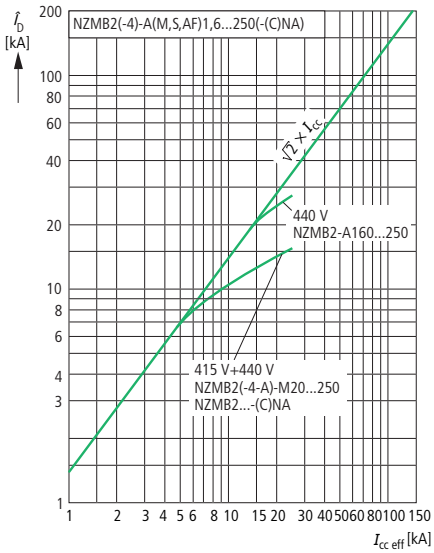

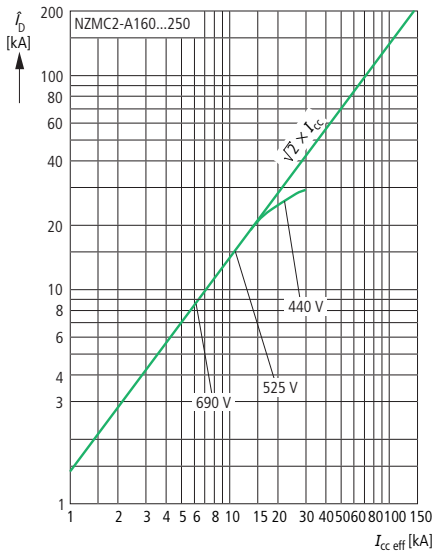

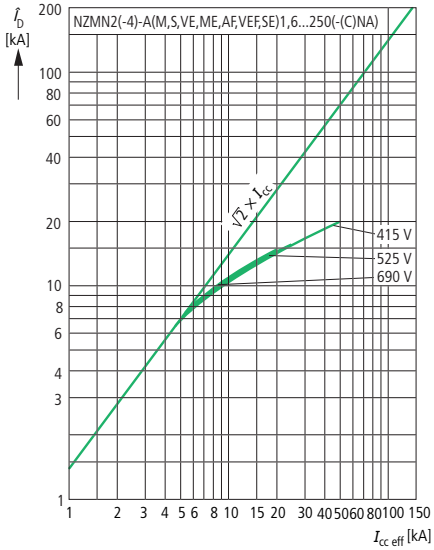

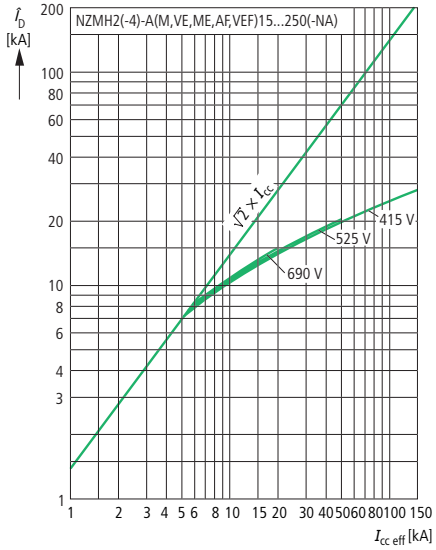

Let-through current $\hat{i}_D$

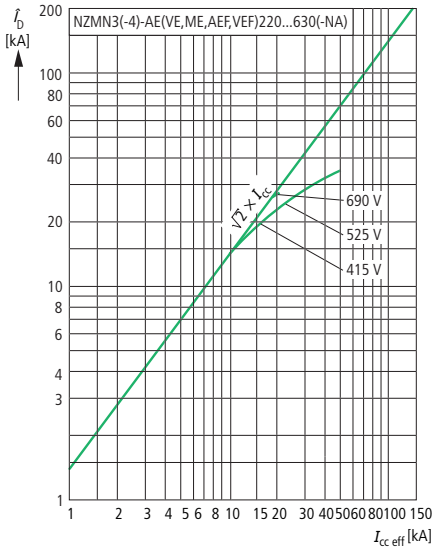

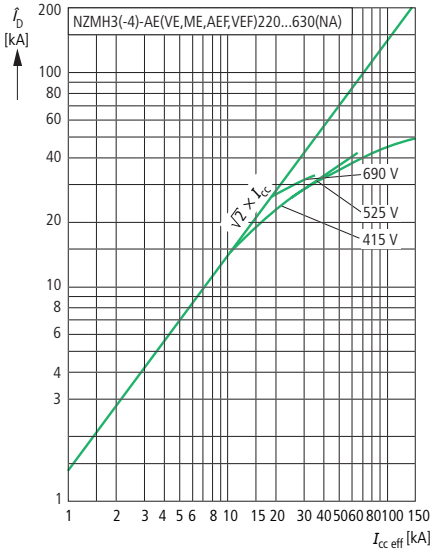

Let-through energy I^2t

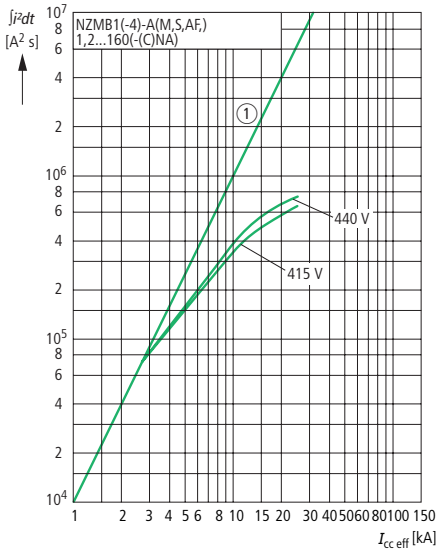

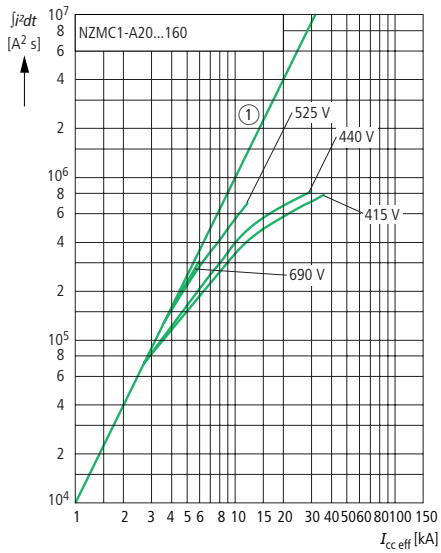

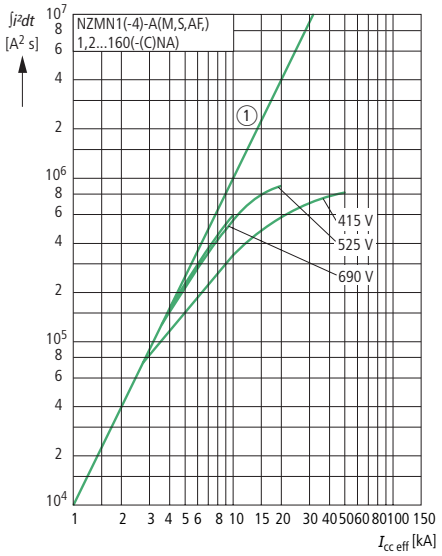

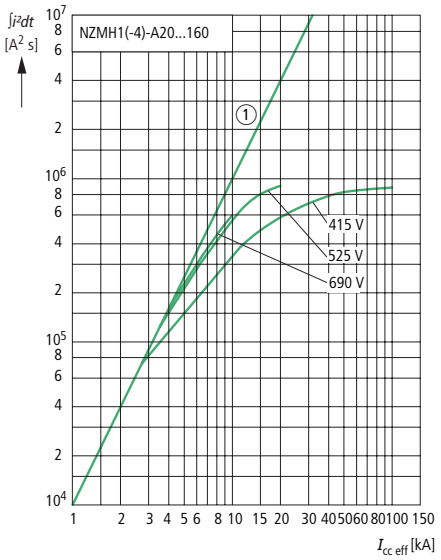

① 1 half-cycle

① 1 half-cycle

Let-through energy I^2t

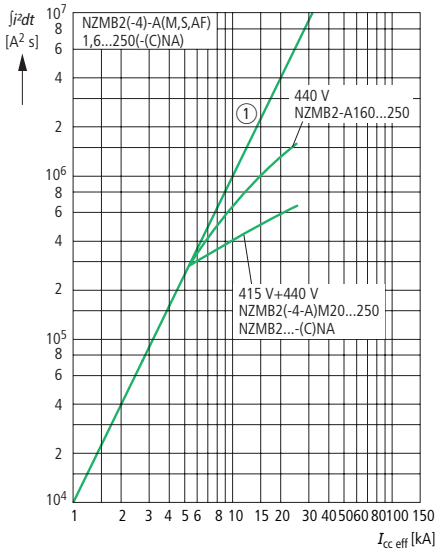

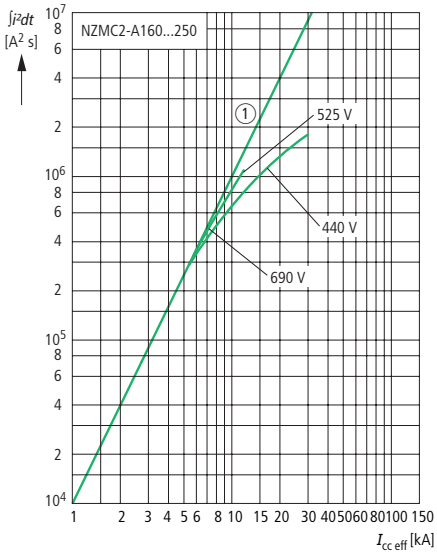

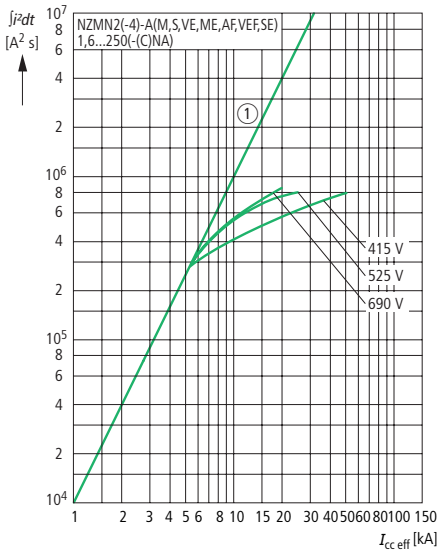

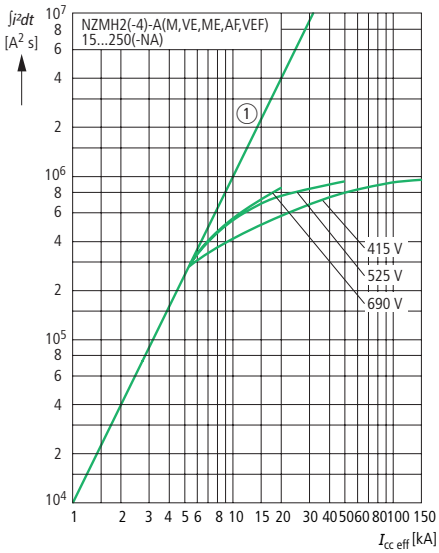

① 1 half-cycle

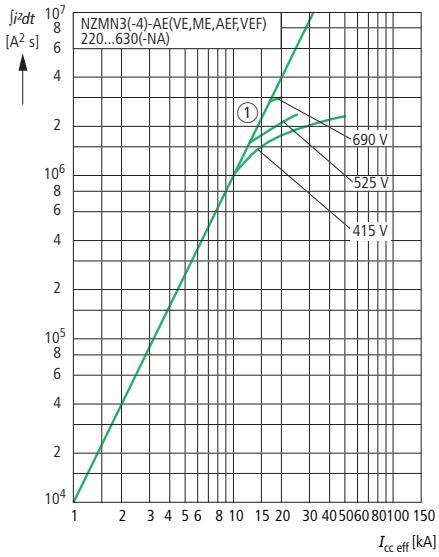

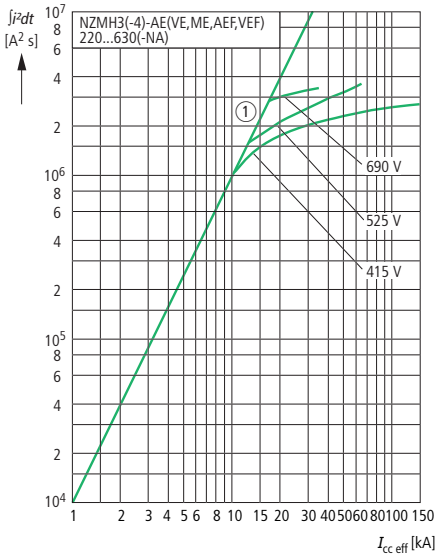

Frequency response

NZM2-4-XFIA30
30 mA

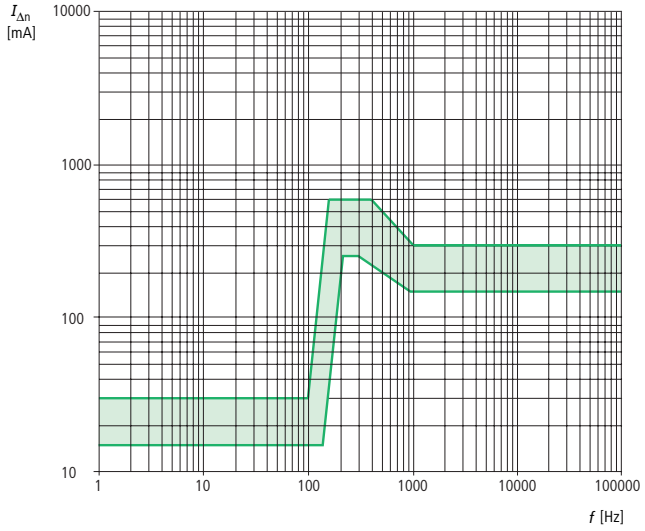

NZM2-4-XFIA
100 mA

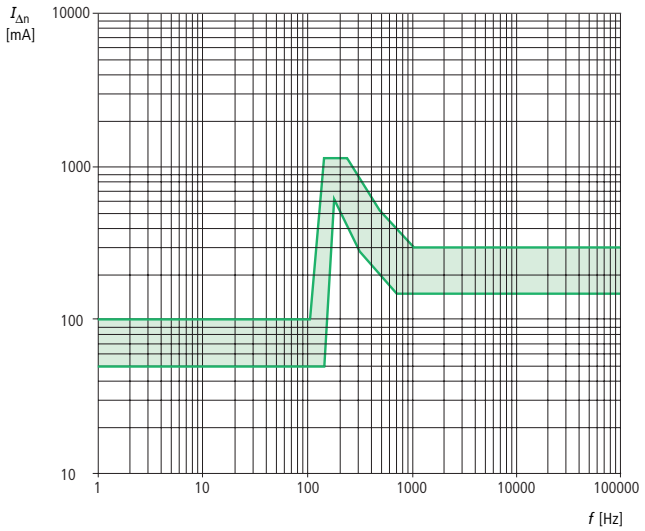

NZM2-4-XFIA
300 mA

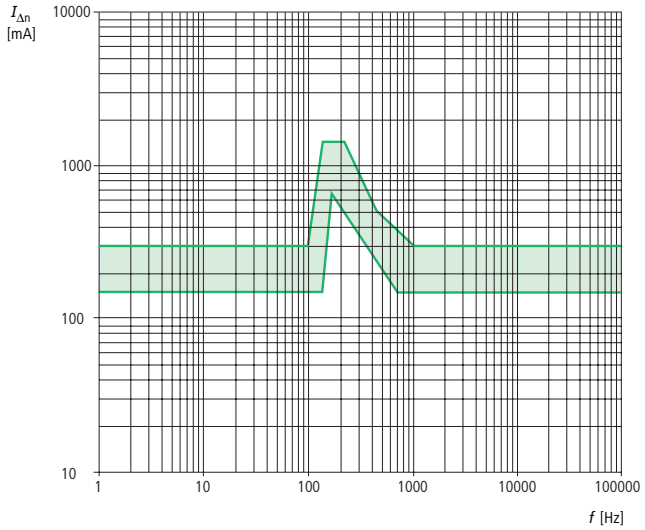

1000 mA

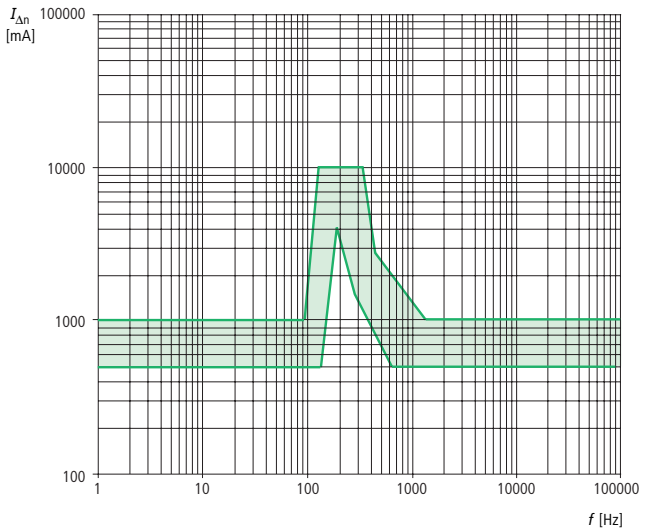

			Rated uninterrupted current max. 160 A			
			NZMB1	NZMC1	NZMN1	NZMH1
General						
Standards			IEC/EN 60947			
Protection against direct contact			Finger and back of hand proof to VDE 0106 Part 100			
Climatic proofing			Damp heat, constant, according to IEC 60068-2-78 Damp heat, cyclical to IEC 60068-2-30			
Ambient temperature						
Storage		°C	–25…+70			
Operation		°C	–25…+70			
Mechanical shock resistance (IEC/EN 60068-2-27)			20 (half-sinusoidal shock 20 ms)			
Safe isolation to VDE 0106 Part 101 and Part 101/A1						
Between auxiliary contacts and main contacts		V AC	500			
between the auxiliary contacts		V AC	300			
Mounting position			Vertical and 90° in all directions 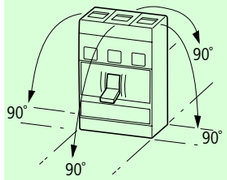 With residual-current release NZM1, N(S)1: Vertical and 90° in all directions			
Direction of incoming supply			As required			
Degree of protection						
Device			In the operating controls area: IP20 (basic degree of protection)			
Enclosures			With insulating surround: IP40, with door coupling rotary handle: IP66			
Terminals			Tunnel terminal: IP10 Phase isolator and strip terminal: IP00			
Circuit-breakers						
Rated impulse withstand voltage U_{imp}						
Main contacts		V	6000	6000	6000	6000
Auxiliary contacts		V	6000	6000	6000	6000
Rated operational voltage	U_e	V AC	690	690	690	690
Rated operational voltage switching via 3 contacts		V DC[1)]	–	–	500	500
Overvoltage category/pollution degree			III/3	III/3	III/3	III/3
Rated insulation voltage	U_i	V	690	690	690	690
For use in IT electrical power networks		V	440	690	690	690

Notes

[1)] For rated operational voltage switching on 3 contacts the following applies: DC correction factor for instantaneous release response value NZM1: 1.25, NZM2: 1.35
Setting for I_i at DC = setting I_i AC/DC correction factor
Details apply for 3-pole system protection circuit-breaker with thermomagnetic release NZM(H)1(2)-A…

Switching of one pole via two series contacts

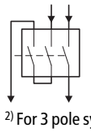

Switching of one pole via three series contacts

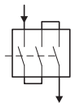

[2)] For 3 pole system protection circuit-breaker the following applies: 690 V

	Rated uninterrupted current max. 250 A				Rated uninterrupted current max. 630 A		Rated uninterrupted current max. 2000 A	
	NZMB2	NZMC2	NZMN2	NZMH2	NZMN3	NZMH3	NZMN4	NZMH4
General								
Standards	IEC/EN 60947							
Protection against direct contact	Finger and back of hand proof to VDE 0106 Part 100							
Climatic proofing	Damp heat, constant, according to IEC 60068-2-78 Damp heat, cyclical to IEC 60068-2-30							
Ambient temperature								
Storage	–25…+70							
Operation	–25…+70							
Mechanical shock resistance (IEC/EN 60068-2-27)	20 (half-sinusoidal shock 20 ms) NZM4: (half-sinusoidal shock 11 ms)							
Safe isolation to VDE 0106 Part 101 and Part 101/A1								
Between auxiliary contacts and main contacts	500							
between the auxiliary contacts	300							
Mounting position	Vertical and 90° in all directions 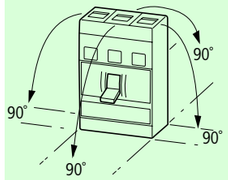 With plug-in adapterNZM2, N(S)2: vertical, 90° right/left with residual current release, NZM2: vertical and 90° to all directions With withdrawable unit, NZM3, N(S)3: vertical, 90° left, NZM4, N(S)4: vertical, with remote operator: NZM2, N(S)2, NZM3, N(S)3, NZM4, N(S)4: vertical and 90° to all directions							
Direction of incoming supply	As required							
Degree of protection								
Device	In the operating controls area: IP20 (basic degree of protection)							
Enclosures	With insulating surround: IP40, with door coupling rotary handle: IP66							
Terminals	Tunnel terminal: IP10 Phase isolator and strip terminal: IP00							
Circuit-breakers								
Rated impulse withstand voltage U_{imp}								
Main contacts	8000	8000	8000	8000	8000	8000	8000	8000
Auxiliary contacts	6000	6000	6000	6000	6000	6000	6000	6000
Rated operational voltage	690	690	690	690	690	690	690	690
Rated operational voltage switching via 3 contacts	–	–	750	750	–	–	–	–
Overvoltage category/pollution degree	III/3	III/3	III/3	III/3	III/3	III/3	III/3	III/3
Rated insulation voltage	1000[2)]	690	1000	1000	1000	1000	1000	1000
For use in IT electrical power networks	440	690	690	690	690	690	525	525

					Rated uninterrupted current max. 160 A			
					NZMB1	NZMC1	NZMN1	NZMH1
Switching capacity								
Rated short-circuit making capacity								
240 V			I_{cm}	kA	63	121	187	220
400/415 V			I_{cm}	kA	53	76	105	220
440 V			I_{cm}	kA	53	63	74	74
525 V			I_{cm}	kA	–	24	40	40
690 V			I_{cm}	kA	–	14	17	17
Rated short-circuit breaking capacity I_{cn}								
I_{cu} to IEC/EN 60947 operating sequence O-t-CO		240 V 50/60 Hz	I_{cu}	kA	30	55	85	100
		400/415 V 50/60 Hz	I_{cu}	kA	25	36	50	100
		440 V 50/60 Hz	I_{cu}	kA	25	30	35	35
		525 V 50/60 Hz	I_{cu}	kA	–	12	20	20
		690 V 50/60 Hz	I_{cu}	kA	–	8	10	10
		500 V DC	I_{cu}	kA	–	–	15	30
		750 V DC	I_{cu}	kA	–	–	–	–
I_{cu} to IEC/EN 60947 operating sequence O-t-CO-t-CO		240 V 50/60 Hz	I_{cs}	kA	30	55	85	100
		400/415 V 50/60 Hz	I_{cs}	kA	25	36	50	50
		440 V 50/60 Hz	I_{cs}	kA	18.5	22.5	35	35
		525 V 50/60 Hz	I_{cs}	kA	–	6	10	10
		690 V 50/60 Hz	I_{cs}	kA	–	4	7.5	7.5
Maximum low-voltage h.b.c. fuse[9]				A gG/gL	NZM.1-…20…100: 200 NZM.1-…125, 160: 315			
Utilization category to IEC/EN 60947-2					A	A	A	A
Rated short-time withstand current								
t = 0.3 s			I_{cw}	kA	–	–	–	–
t = 1 s			I_{cw}	kA	–	–	–	–
Rated making and breaking capacity								
Rated operational current	AC-1	400/415 V 50/60 Hz	I_e	A	160	160	160	160
		690 V 50/60 Hz	I_e	A	160	160	160	160
	AC–-3	400/415 V 50/60 Hz	I_e	A	160	160	160	160
		690 V 50/60 Hz	I_e	A	160	160	160	160
	DC – -1	500 V DC	I_e	A	–	–	125	125
		750 V DC	I_e	A	–	–	–	–
	DC – 3	500 V DC	I_e	A	–	–	125	125
		750 V DC	I_e	A	–	–	–	–
Lifespan, mechanical			Operations		20000	20000	20000	20000
Maximum operating frequency								
Max. operating frequency				Ops/h	120	120	120	120
Lifespan, electrical								
	AC-1	400/415 V 50/60 Hz	Operations		10000[8]	7500	10000	10000
		690 V 50/60 Hz	Operations		–	5000	7500	7500
	AC–-3	400/415 V 50/60 Hz	Operations		7500[4]	–	7500	7500
		690 V 50/60 Hz	Operations		–	–	5000	5000
	DC – -1	500 V DC	Operations				10000	10000
		750 V DC	Operations					
	DC – 3	500 V DC	Operations				5000	5000
		750 V DC	Operations		–	–	–	–
Current heat loss per pole at I_u[6]				W	16.7	16.7	16.7	16.7
Total opening delay at short-circuit				ms	< 10	< 10	< 10	< 10
Technical data, divergent from the products for the IEC market Switching capacity NA switches (UL489, CSA 22.2 No. 5.1)								
		240 V 60 Hz		kA	35	–	85	–
		480V 60Hz		kA	25[1]	–	35[1]	–
		600 V 60 Hz		kA	–	–	–	–

	Rated uninterrupted current max. 250 A				Rated uninterrupted current max. 630 A		Rated uninterrupted current max. 2000 A	
	NZMB2	NZMC2	NZMN2	NZMH2	NZMN3	NZMH3	NZMN4	NZMH4
Switching capacity								
Rated short-circuit making capacity								
240 V	63	121	187	330	187	330	105	275
400/415 V	53	76	105	330	105	330	105	187
440 V	53	63	74	286	74	286	74	187
525 V	–	24	53	105	53	143	53	143
690 V	–	9	40	40	40	74	40	105
Rated short-circuit breaking capacity I_{cn}								
I_{cu} to IEC/EN 60947 operating sequence O-t-CO	30	55	85	150	85	150	50	125
	25	36	50	150	50	150	50	85
	25	30	35	130	35	130	35	85[10]
	–	112	25	50	25	65	25	65
	–	8	20	20	20	35	20	50
	–	–	30	60	–	–	–	–
	–	–	30	60	–	–	–	–
I_{cu} to IEC/EN 60947 operating sequence O-t-CO-t-CO	30	55	85	150	85	150	37	63
	25	36	50	150	50	150	37	43
	18.5	22.5	35	130	35	130	26	43
	–	9	25	37.5	13	33	19	49
	–	4	5	5	5	9	15	37
Maximum low-voltage h.b.c. fuse[9]	355	355	355	355	NZMN3-…250, 400: 400 NZMN3-…630: 630		NZMN4-…630…1250: 2 × 630 NZMN4-…1600: 2 × 800 NZMN4-2000: 2 × 1000	
Utilization category to IEC/EN 60947-2	A	A	A	A	A	A	B (2000A: A)	B (2000A: A)
Rated short-time withstand current								
t = 0.3 s	–	–	1.9	1.9	3.3	3.3	19.2	19.2
t = 1 s	–	–	1.9	1.9	3.3	3.3	19.2	19.2
Rated making and breaking capacity								
Rated operational current AC-1 400/415 V 50/60 Hz	250	250	250	250	630	630	2000	2000
AC-1 690 V 50/60 Hz	250	250	250	250	630	630	2000	2000
AC–-3 400/415 V 50/60 Hz	250	250	250	250	630	630	1600[2]	1600[2]
AC–-3 690 V 50/60 Hz	250	250	250	250	630	630	1600[2]	1600[2]
DC – -1 500 V DC	–	–	250	250	–	–	–	–
DC – -1 750 V DC	–	–	250	250	–	–	–	–
DC – 3 500 V DC	–	–	250	250	–	–	–	–
DC – 3 750 V DC	–	–	250	250	–	–	–	–
Lifespan, mechanical	20000	20000	20000	20000	15000	15000	10000	10000
Maximum operating frequency								
Max. operating frequency	120	120	120	120	60	60	60	60
Lifespan, electrical								
AC-1 400/415 V 50/60 Hz	10000[8]	7500	10000	10000	5000	5000	3000[10]	3000[10]
AC-1 690 V 50/60 Hz	–	5000	7500	7500	3000	3000	2000[10]	2000[10]
AC–-3 400/415 V 50/60 Hz	6500[4]	–	6500	6500	2000	2000	2000[10]	2000[10]
AC–-3 690 V 50/60 Hz	–	5000	5000	5000	2000	2000	1000[10]	1000[10]
DC – -1 500 V DC			7500	7500				
DC – -1 750 V DC			7500	7500				
DC – 3 500 V DC			3000	3000				
DC – 3 750 V DC	–	–	3000	3000	–	–	–	–
Current heat loss per pole at I_u[6]	19	19	19	19	40	40	97 (2000 A)	97 (2000 A)
Total opening delay at short-circuit	< 10	< 10	< 10	< 10	< 10	< 10	< 25 ≦ 415 V; < 35 > 415 V	< 25 ≦ 415 V; < 35 > 415 V
Technical data, divergent from the products for the IEC market Switching capacity NA switches (UL489, CSA 22.2 No. 5.1)								
240 V 60 Hz	35	–	85	150[3]	85	150[3]	85	125
480V 60Hz	25	–	35	100[3]	42	100[3]	42	85
600 V 60 Hz	18	–	25	50[3]	35	50[3]	35	50

Notes

1) For NA switch switching capacity with NZM…1-…(C)NA the following applies: 480 Y/277 V from 60 A
2) For AC-3 rated operational current with NZM4 the following applies: 400 V: max. 650 kW; 690 V: max. 600 kW
3) For NA switch switching capacity with NZML2 and NZML3 the following applies: Current Limiting switch to UL489
4) For 3-pole system protection circuit-breaker the AC-3 specification is not applicable
5) For NA switch switching capacity with NZML4 at 240 V 60 Hz the following applies: on request
6) For current heat loss per pole the specification refers to the maximum nominal current of the frame size.
7) For 3-pole system protection circuit-breaker the following applies: 400/415 V 7500 switching operations
8) Maximum back-up fuse, if the expected short-circuit currents at the installation location exceed the switching capacity of the circuit-breaker.
9) ≦ 1600 A
10) Higher switching capacity on request

Current limiting values: NZM 2... and NZM 3...

Circuit-breaker		Voltage	Threshold Current			Intermediate Current			High Interrupting Capacity		
Part no.	max. size			Maximum			Maximum			Maximum	
		at 60 Hz	sym. rms	Peak	I^2dt	sym. rms	Peak	I^2dt	sym. rms	Peak	I^2dt
	[A]	[V]	[kA]	[kA]	[kA²s]	[kA]	[kA]	[kA²s]	[kA]	[kA]	[kA²s]
NZM 2-	250 A	240	16.25	12.80	0.36	100	20.23	0.40	150	20.00	0.38
A...		480	16.25	13.20	0.50	65	23.63	0.85	100	26.55	0.78
AF...		600	16.25	12.98	0.60	30	19.40	0.67	50	24.40	0.84
NZM 2-	250 A	240	16.25	11.40	0.31	100	18.23	0.27	150	20.40	0.32
VE...		480	16.25	14.23	0.48	65	23.63	0.58	100	26.43	0.62
VEF...		600	16.25	14.33	0.48	30	19.60	0.60	50	24.63	0.79
NZM3	600 A	240	39	41.20	3.30	100	31.00	1.01	150	36.80	1.34
		480	39	29.50	1.60	65	36.40	2.34	100	43.10	1.92
		600	30	29.50	2.24	42	33.80	2.04	50	39.15	2.42

	Part no.	Weight kg
Circuit-breaker		
	NZM...1-...	1.046
	NZM...1-4-...	1.325
	NZM...2-...	2.345
	NZM...2-4-...	3.5
	NZM...3-...	6.34
	NZM...3-4-...	8.4
	NZM...4-...	21
	NZM...4-4-... / NZM...4-VE2000	27
Plug-in adapter elements		
	+NZM2-XSV	4.7
	+NZM2-4-XSV	5.9
Withdrawable unit		
	+NZM3-XAV	21
	+NZM3-4-XAV	27
	+NZM4-XAV	52
	+NZM4-4-XAV	65

	Part no.	Weight kg
Circuit-breaker		
	PN1-..., N1-...	0.926
	PN1-4-..., N1-4-...	1.325
	PN2-..., N2-...	2.15
	PN2-4-..., N2-4-...	2.65
	PN3-..., N3-...	5.7
	PN3-4-..., N3-4...	7.1
	N4-...	17
	N4-4-...	22

			NZMH2, N2 max. 250 A	NZMN3 max. 630 A	NZMH4, N4 max. 1600 A
General					
Utilization category			A	A	A/B
Maximum operating frequency		Ops/h	120	60	60
Lifespan					
mechanical (of which max. 50 % trip by shunt/ undervoltage release)			20000	15000	10000
electrical, AC-1 1000 V		Switching operations	3000	1000	500
Rated operational voltage	U_e	V AC	1000	1000	1000
Circuit-breakers					
Rated uninterrupted current	I_u	A	250	630	1600
Rated short-circuit making capacity					
up to 1000 V 50/60 Hz	I_{cm}	kA	17	17	40
Rated short-circuit breaking capacity I_{cn}					
I_{cu} to IEC/EN 60947 operating sequence O-t-CO	I_{cu}	kA	3	10	20
I_{es} to IEC/EN 60947 operating sequence O-t-CO-t-CO	I_{cs}	kA	3	10	15
Rated making and breaking capacity					
Rated operational current					
AC-1			250	630	1600
Rated insulation voltage	U_i	V	1000	1000	1000
Use in IT power networks			–	–	–
Switch-disconnectors					
Rated uninterrupted current	I_u	A	250		1600
Rated short-time withstand current	I_{cw}	kA	3.5	–	25
Rated making and breaking capacity					
Rated operational current					
AC-22/23A	I_e		250		1600
Rated insulation voltage	U_i	V	1000	–	1000
Use in IT power networks			–	–	–
Rated conditional short-circuit current					
With back-up fuse		A gG/gL	N2-160…250-S1: 250	–	–
1000 V		kA	10	–	–
With downstream fuse		A gG/gL	N2-160…250-S1: 250	–	–
1000 V		kA	10	–	–

			PN1/N1 max. 160 A	PN2/N2 max. 250 A	PN3/N3 max. 630 A	N4 max. 1600 A
Switch-disconnectors						
Rated impulse withstand voltage U_{imp}						
Main contacts		V	6000	8000	8000	8000
Auxiliary contacts		V	6000	6000	6000	6000
Rated operational voltage	U_e	V AC	690	690	690	690
Rated uninterrupted current max.						
IEC/EN 60947-2 annex L	I_u	A	160	250	630	1600
Technical data, divergent from the products for the IEC market UL489, CSA 22.2 No. 5.1	I_u	A	125	160	550	1200
Overvoltage category/pollution degree			III/3	III/3	III/3	III/3
Rated insulation voltage	U_i	V AC	690	690	1000	1000
For use in IT electrical power networks		V	690	690	690	525
Switching capacity						
Rated short-circuit making capacity	I_{cm}	kA	2.8	5.5	25	53
Rated short-time withstand current						
t = 0.3 s	I_{cw}	kA	2	3.5[1]	12	25
t = 1 s	I_{cw}	kA	2	3.5[1]	12	25
Rated conditional short-circuit current						
With back-up fuse		A gG/gL	PN1(N1)-63…125: 125 PN1(N1)-160: 160	PN2(N2)-160…250: 250	PN3(N3)-400…630: 630	N4-630…1600: 2 × 800
400 … 415 V		kA	100	100	100	100
690 V		kA	80	80	80	80
With downstream fuse		A gG/gL	PN1(N1)-63…125: 125 PN1(N1)-160: 160	PN2(N2)-160…250: 250	PN3(N3)-400…630: 630	N4-630…1600: 2 × 800
400 … 415 V		kA	100	100	100	100
690 V		kA	10	80	80	80
Rated making and breaking capacity						
Rated operational current, AC-22/23A						
415 V	I_e	A	160	250	630	1600
690 V	I_e	A	160	250	630	1600
Lifespan, mechanical	Operations		20000	20000	15000	10000
Maximum operating frequency		Ops./h	120	120	60	60
Lifespan, electrical to IEC/EN 60947-4-1 section B						
AC-1						
400/415 V	Operations		10000	10000[4]	5000	3000
690 V	Operations		7500	7500[4]	3000	2000
AC–-3						
400/415 V	Operations		7500	7500[5]	3000	2000
690 V	Operations		5000	5000[3][5]	2000	1000
Current heat loss per pole at I_u[2]		W	12.7	16	40	97

Notes

[1] The rated short time withstand current for PN2/N2 in conjunction with residual-current release NZM2-4-XFI… I_{cw} = 1.5 kA
[2] The current heat loss per pole ratings refer to the maximum current rating of the frame size.
[3] For the electrical life at AC-3 for PN2/N2 the following applies: 690 V: max. 160 kW
[4] For 3-pole switch-disconnectors the following applies: 400/415 V 7500 switching operations; 690 V 5000 switching operations
[5] For 3-pole switch-disconnectors the following applies: 400/415 V 6000 switching operations; 690 V 4000 switching operations

					NS1-...-NA max. 125A	NS2-...-NA max. 250A	NS3-...-NA max. 600A	NS2-...-NA max. 250A
Moulded Case Switch								
Rated peak withstand current			U_{imp}					
Main contacts				V	6000	8000	8000	8000
Auxiliary contacts				V	6000	6000	6000	6000
Rated operational voltage			U_e	VAC	690	690	690	690
Rated uninterrupted current max.								
IEC/EN 60947-2 annex L			I_n	A	125	250	600	1200
UL489/CSA 22.2 No. 5.1			I_n	A	125	250	600	1200
Overvoltage category/pollution degree					III/3	III/3	III/3	III/3
Rated insulation voltage			U_i	V	690	1000	1000	1000
Switching capacity according to UL 489, CSA 22.2 No. 5.1								
		240 V 60 Hz		KA	85	150	150	85
		480 V 60 Hz		KA	35	100	100	65
		600 V 60 Hz		KA	–	50	50	42
Switching capacity, divergent from the products for the NA market								
Rated short-circuit making capacity		240 V 50/60 Hz	I_{cm}	KA	187	330	330	187
		400/415 V 50/60 Hz	I_{cm}	KA	105	330	330	154
		440 V 50/60 Hz	I_{cm}	KA	74	286	286	143
		525 V 50/60 Hz	I_{cm}	KA	53	105	143	84
		690 V 50/60 Hz	I_{cm}	KA	17	53	74	74
Rated short-circuit breaking capacity $I_{cc} = I_{cu}$ according to IEC/EN 60947-2 Annex L	I_{cu} to IEC/EN 60947 test cycle O-t-CO	240 V 50/60 Hz	I_{cu}	KA	85	150	150	85
		400/415 V 50/60 Hz	I_{cu}	KA	50	150	150	70
		440 V 50/60 Hz	I_{cu}	KA	35	130	130	65
		525 V 50/60 Hz	I_{cu}	KA	20	50	85	40
		690 V 50/60 Hz	I_{cu}	KA	10	20	35	35
	I_{cs} according to IEC/EN 60947 test cycle O-t-CO-t-CO	240 V 50/60 Hz	I_{cs}	KA	85	150	150	43
		400/415 V 50/60 Hz	I_{cs}	KA	50	150	150	35
		440 V 50/60 Hz	I_{cs}	KA	35	130	130	33
		525 V 50/60 Hz	I_{cs}	KA	10	37.5	33	20
		690 V 50/60 Hz	I_{cs}	KA	7.5	5	9	18
Lifespan, mechanical (of which max. 50 % trip by shunt/undervoltage release)			Operations		20000	20000	15000	10000
Maximum operating frequency			ops./h		120	120	60	60
Lifespan, electrical	AC–-1	400/415 V 50/60 Hz	Operations		10000	10000	5000	3000
		690 V 50/60 Hz	Operations		7500	7500	3000	2000
	AC-3	400/415 V 50/60 Hz	Operations		7500	6500	2000	2000
		690V 50/60 Hz	Operations		5000	5000	2000	1000
Current heat loss per pole at I_u[1)]			W		8.7	19	40	97
Total downtime in a short-circuit			ms		< 10	< 10	< 10	< 25 ≦ 415 V < 35 > 415 V

Notes [1)] Details refer to the maximum nominal current of the frame size

Device Type	Release type	Response values of the overload release at temperatures deviating from the reference temperatures Temperature compensation coefficient						
		20 °C	30 °C	40 °C	50 °C	60 °C	65 °C	70 °C
Thermomagnetic release (TM)								
System protection		Protection of systems (reference temperature 40 °C)						
NZM...1(-4)-A(F)15…80(-NA)	TM	1.14	1.07	1	0.93	0.86	0.83	0.79
NZM...1(-4)-A(F)90…125(-NA)	TM	1.14	1.07	1	0.93	0.86	0.83	0.79
NZM...1(-4)-A160	TM	1.08	1.04	1	0.96	0.92	0.90	0.88
NZM...2(-4)-A(F)15…200(-NA)	TM	1.04	1.02	1	0.98	0.96	0.95	0.94
NZM...2(-4)-A(F)250(-NA)	TM	1.04	1.02	1	0.98	0.96	0.95	0.94
NZM...2(-4)-A20…200 + XSV	TM with XSV	1.04	1.02	1	0.98	0.96	0.95	0.94
NZM...2(-4)-A250 + XSV	TM with XSV	1.04	1.02	1	0.98	0.96	0.95	0.94
Short-circuit / motor protection		Motor protection (reference temperature 20 °C)						
NZM...1-M(S)40…80(-CNA)	TM	1	0.98	0.95	0.93	0.90	0.89	0.88
NZM...1-M(S)100(-CNA)	TM	1	0.98	0.95	0.93	0.90	0.89	0.88
NZM...2-M(S)20…200(-CNA)	TM	1	0.98	0.96	0.94	0.92	0.91	0.90
NZM...2-M(S)20…200 + XSV	TM with XSV	1	0.98	0.96	0.94	0.92	0.91	0.90

Notes With temperatures which deviate from the reference temperature, a slight change of the overload protection properties occurs. In order to determine the release time using the tripping characteristics the temperature compensation coefficient in accordance with the table must be considered.
Example: An NZM1-A100 is calibrated for a reference temperature of 40 °C.
What happens when it is operated at an ambient temperature of 60 °C ?
At 60 °C, the temperature compensation coefficient of 0.86 results in a reduced operating current of I_r = 100 A × 0.86 = 86 A. In other words at an ambient temperature of 60 °C the NZM1-A100 trips as if it were set to 86 A.

Device Type	Release type	Reduction of the rated operational current (derating) under particular ambient conditions (according to IEC 947) Derating coefficient						
		20 °C	30 °C	40 °C	50 °C	60 °C	65 °C	70 °C
Thermomagnetic release (TM)								
System protection		Protection of systems (reference temperature 40 °C)						
NZM...1(-4)-A(F)15…80(-NA)	TM	1	1	1	1	1	1	1
NZM...1(-4)-A(F)90…125(-NA)	TM	1	1	1	1	0.86	0.83	0.8
NZM...1(-4)-A160	TM	1	1	1	0.95	0.9	0.85	0.8
NZM...2(-4)-A(F)15…200(-NA)	TM	1	1	1	1	1	1	1
NZM...2(-4)-A(F)250(-NA)	TM	1	1	1	1	0.9	0.85	0.8
NZM...2(-4)-A20…200 + XSV	TM with XSV	1	1	1	1	1	1	1
NZM...2(-4)-A250 + XSV	TM with XSV	1	0.97	0.92	0.87	0.81	–	–
Short-circuit / motor protection		Motor protection (reference temperature 20 °C)						
NZM...1-M(S)40…80(-CNA)	TM	1	1	1	1	1	1	1
NZM...1-M(S)100(-CNA)	TM	1	1	1	1	0.86	0.83	0.8
NZM...2-M(S)20…200(-CNA)	TM	1	1	1	1	1	1	1
NZM...2-M(S)20…200 + XSV	TM with XSV	1	1	1	1	1	1	1

Notes The derating coefficient must be considered in accordance with the following table in order to determine the maximum permissible current loading at different ambient temperatures.

Example: An NZM2-A250 should be operated at an ambient temperature of 65 °C.
How high is the permissible rated operational current I_e?
At 65 °C the derating coefficient is 0.85, this means I_e = 250 A × 0.85 = 212.5 A.
The NZM2-A250 may be operated at an ambient temperature of 65 °C with a maximum I_e = 212.5 A.

Device Type	Release type	Reduction of the rated operational current (derating) under particular ambient conditions (according to IEC 947) Derating coefficient						
		20 °C	30 °C	40 °C	50 °C	60 °C	65 °C	70 °C
Electronic release (E)								
System protection								
NZM...3(-4)-AE(F)250...500(-NA)	E	1	1	1	1	1	1	1
NZM...3(-4)-AE(F)550...630(-NA)	E	1	1	1	1	0.9	0.85	0.8
NZM...3(-4)-AE250...400 + XAV	E with XAV	1	1	1	1	1	1	1
NZM...3(-4)-AE630 + XAV	E with XAV	0.96	0.92	0.87	0.83	0.78	0.75	0.73
NZM...4(-4)-AE(F)600...1250(-NA)	E	1	1	1	1	1	1	1
NZM...4(-4)-AE1600	E	1	1	1	1	0.87	0.85	0.82
NZM...4(-4)-AE630...1250 + XAV	E with XAV	1	1	1	1	1	1	1
NZM...4(-4)-AE1600 + XAV	E with XAV	1	0.98	0.93	0.89	0.85	0.83	0.8
Systems protection, cable protection, selectivity and generator protection								
NZM...2(-4)-VE(F)100...175(-NA) (-S1)	E	1	1	1	1	1	1	1
NZM...2(-4)-VE(F)200...250(-NA) (-S1)	E	1	1	1	1	0.9	0.85	0.8
NZM...2(-4)-VE100...160 + XSV	E with XSV	1	1	1	1	1	1	1
NZM...2(-4)-VE250 + XSV	E with XSV	1	1	1	0.94	0.88	0.84	0.81
NZM...3(-4)-VE(F)250...500(-NA)	E	1	1	1	1	1	1	1
NZM...3(-4)-VE(F)550...630(-NA)	E	1	1	1	1	0.9	0.85	0.8
NZM...3(-4)-VE250...400 + XAV	E with XAV	1	1	1	1	1	1	1
NZM...3(-4)-VE630 + XAV	E with XAV	0.96	0.92	0.87	0.83	0.78	0.75	0.73
NZM...4(-4)-VE(F)600...1250(-NA) (-S1)	E	1	1	1	1	1	1	1
NZM...4(-4)-VE1600 (-S1)	E	1	1	1	1	0.87	0.85	0.82
NZM...4(-4)-VE630...1250 + XAV	E with XAV	1	1	1	1	1	1	1
NZM...4(-4)-VE1600 + XAV	E with XAV	1	0.98	0.93	0.89	0.85	0.83	0.8
Motor protection								
NZM...2-ME(SE)90...140(-CNA)	E	1	1	1	1	1	1	1
NZM...2-ME(SE)220(-CNA)	E	1	1	1	1	0.9	0.85	0.8
NZM...2-ME90...140 + XSV	E with XSV	1	1	1	1	1	1	1
NZM...2-ME220 + XSV	E with XSV	1	1	1	0.94	0.88	0.84	0.81
NZM...3-ME(SE)220...350(-CNA) (-S1)	E	1	1	1	1	1	1	1
NZM...3-ME(SE)450(-CNA) (-S1)	E	1	1	1	1	1	1	1
NZM...3-ME220...350 + XAV	E with XAV	1	1	1	1	1	1	1
NZM...3-ME450 + XAV	E with XAV	0.96	0.92	0.87	0.83	0.78	0.75	0.73
NZM...4-ME550...875 (-S1)	E	1	1	1	1	1	1	1
NZM...4-ME1400 (-S1)	E	1	1	1	1	1	1	1
NZM...4-ME550...875 + XAV	E with XAV	1	1	1	1	1	1	1
NZM...4-ME1400 + XAV	E with XAV	1	0.98	0.93	0.89	0.85	0.83	0.8
Switch-disconnector / Molded Case Switch								
N1(-4) -63, PN1(-4)-63, NS1-63-NA		1	1	1	1	1	1	1
N1(-4) -100...125, PN1(-4)-100...125, NS1-100...125-NA		1	1	1	1	0.86	0.83	0.8
N1(-4) -160, PN1(-4)-160		1	1	1	0.95	0.9	0.85	0.8
N2(-4) -160...200, PN2(-4)-160...200, NS2-160...200-NA		1	1	1	1	1	1	1
N2(-4) -250, PN2(-4)-200, NS2-250-NA		1	1	1	1	0.9	0.85	0.8
N2(-4) -160...200 + XSV		1	1	1	1	1	1	1
N2(-4) -250, NS2-250-NA		1	0.97	0.92	0.87	0.81	-	-
N3(-4)-400, PN3(-4)-400, NS3-400-NA		1	1	1	1	1	1	1
N3(-4)-630, PN3(-4)-630, NS3-600-NA		1	1	1	1	0.9	0.85	0.8
N3(-4)-400 + XAV		1	1	1	1	1	1	1
N3(-4)-630 + XAV		0.96	0.92	0.87	0.83	0.78	0.75	0.73
N4(-4)-630...1250, NS4-800...1200-NA		1	1	1	1	1	1	1
N4(-4)-1600		1	1	1	1	0.87	0.85	0.82
N4(-4)-630...1250 + XAV		1	1	1	1	1	1	1
N4(-4)-1600 + XAV		1	0.98	0.93	0.89	0.85	0.83	0.8

Notes The derating coefficient must be considered in accordance with the following table in order to determine the maximum permissible current loading at different ambient temperatures.

Example:An NZM2-A250 should be operated at an ambient temperature of 65 °C.
How high is the permissible rated operational current I_e?
At 65 °C the derating coefficient is 0.85, this means I_e = 250 A × 0.85 = 212.5 A.
The NZM2-A250 may be operated at an ambient temperature of 65 °C with a maximum I_e = 212.5 A.

NZM up to 250 A with thermomagnetic release (3- and 4-pole)

	Fixed mounting											
	NZM1-								NS1-		N1-, PN1-	
	A...(-NA)		M...		AF...-NA		S...-CNA		...-NA			
I_n [A]	P [W]	R [µOhm]	P [W]	R [µOhm]	P [W]	R [µOhm]	P [W]	R [µOhm]	P [W]	R [µOhm]	P [W]	R [µOhm]
1.2	–	–	–	–	–	–	1.2	413000	–	–	–	–
1.6	–	–	–	–	–	–	–	–	–	–	–	–
2	–	–	–	–	–	–	0.5	66000	–	–	–	–
2.4	–	–	–	–	–	–	–	–	–	–	–	–
3	–	–	–	–	–	–	1.1	66000	–	–	–	–
5	–	–	–	–	–	–	0.4	9180	–	–	–	–
8	–	–	–	–	–	–	1	9180	–	–	–	–
12	–	–	–	–	–	–	0.5	1670	–	–	–	–
15	–	–	–	–	5.5	8180	–	–	–	–	–	–
18	–	–	–	–	–	–	1.3	1670	–	–	–	–
20	9.8	8180	–	–	9.8	8180	–	–	–	–	–	–
25	8.8	4680	–	–	8.8	4680	–	–	–	–	–	–
26	–	–	–	–	–	–	2	1050	–	–	–	–
30	–	–	–	–	8.2	3030	–	–	–	–	–	–
32	9.1	3030	–	–	–	–	–	–	–	–	–	–
33	–	–	–	–	–	–	3.2	1050	–	–	–	–
35	–	–	–	–	8.2	2220	–	–	–	–	–	–
40	11	2220	13.5	2810	11	2220	2.7	562	–	–	–	–
45	–	–	–	–	10.7	1760	–	–	–	–	–	–
50	13.5	1760	15	1880	13.5	1760	4.2	562	–	–	–	–
60	–	–	–	–	12.9	1190	–	–	–	–	–	–
63	14	1190	16.7	1250	–	–	6.7	562	6.7	562	6	380
70	–	–	–	–	12.5	850	–	–	–	–	–	–
80	15.5	850	21.1	1085	15.5	850	10.8	562	–	–	–	–
90	–	–	–	–	17.7	730	–	–	–	–	–	–
100	24	730	25	795	24	730	16.9	562	16.9	562	15	380
110	–	–	–	–	20.7	570	–	–	–	–	–	–
125	38	570	–	–	38	570	–	–	26.3	562	24	380
150	–	–	–	–	–	–	–	–	–	–	–	–
160	50	460	–	–	–	–	–	–	–	–	38	380
175	–	–	–	–	–	–	–	–	–	–	–	–
200	–	–	–	–	–	–	–	–	–	–	–	–
225	–	–	–	–	–	–	–	–	–	–	–	–
250	–	–	–	–	–	–	–	–	–	–	–	–

Note: The values stated in the table apply for 3- and 4-pole fixed mounted devices with an equal load distribution.
On 4-pole devices the current in the N-conductor is equal to zero.
The total resistive load is the measured value for a 3-pole or a 4-pole switch.
The total heat dissipation is the value measured at I_n, 50/60Hz for a 3-pole or 4-pole switch.
The heat dissipation can be calculated with the formula: $P = 3 \times R \times I^2$

NZM up to 1600 A with electronic release (3- and 4-pole)

Fixed mounting		Supplementary Plug-in units	Fixed mounting		Supplementary Withdrawable units	Fixed mounting		Supplemementary Withdrawable units
NZM2-	N2, PN2		NZM3-NS3	N3-, PN3-		NZM4-NS4	N4-	
R [µOhm]	R [µOhm]	R [µOhm]	R [µOhm]	R [µOhm]	R [µOhm]	R [µOhm]	R [µOhm]	R [µOhm]
275	256	100	100	90	70	37	37	10

Note: The values stated in the table apply for 3- and 4-pole devices with an equal load distribution.
On 4-pole devices the current in the N-conductor is equal to zero.
The total resistive load is the measured value for a 3-pole or a 4-pole switch
(independent of I_n and the type of release).
The total resistive load for a plug-in or withdrawable switch results from:
the resistive value for fixed mounted + resistive value for plug-in or withdrawable.
The heat dissipation can be calculated with the formula: $P = 3 \times R \times I^2$

	Fixed mounting											
	NZM2-								NS2-		N2-, PN2-	
	A...(-NA)		M...		AF...-NA		S...-CNA		...-NA			
	P [W]	R [µOhm]	P [W]	R [µOhm]	P [W]	R [µOhm]	P [W]	R [µOhm]	P [W]	R [µOhm]	P [W]	R [µOhm]
1.2	–	–	–	–	–	–	–	–	–	–	–	–
1.6	–	–	–	–	–	–	6.2	750000	–	–	–	–
2	–	–	–	–	–	–	–	–	–	–	–	–
2.4	–	–	–	–	–	–	8.4	450000	–	–	–	–
3	–	–	–	–	–	–	–	–	–	–	–	–
5	–	–	–	–	–	–	0.2	4600	–	–	–	–
8	–	–	–	–	–	–	0.5	4600	–	–	–	–
12	–	–	–	–	–	–	0.4	1200	–	–	–	–
15	–	–	–	–	3	4250	–	–	–	–	–	–
18	–	–	–	–	–	–	1	1200	–	–	–	–
20	5.1	4250	5.1	4250	5.1	4250	–	–	–	–	–	–
25	8	4250	8	4250	6	3140	–	–	–	–	–	–
26	–	–	–	–	–	–	0.5	780	–	–	–	–
30	–	–	–	–	9	3140	–	–	–	–	–	–
32	10	3140	10	3140	–	–	–	–	–	–	–	–
33	–	–	–	–	–	–	0.9	780	–	–	–	–
35	–	–	–	–	11	2800	–	–	–	–	–	–
40	13	2800	13	2800	13	2800	1.5	317	–	–	–	–
45	–	–	–	–	15	2270	–	–	–	–	–	–
50	18	2270	18	2270	18	2270	2.5	317	–	–	–	–
60	–	–	–	–	19	1700	–	–	–	–	–	–
63	20	1700	20	1700	–	–	4	317	–	–	–	–
70	–	–	–	–	17	1070	–	–	–	–	–	–
80	22	1070	22	1070	22	1070	6	317	–	–	–	–
90	–	–	–	–	23	855	–	–	–	–	–	–
100	28	855	28	855	28	855	10	317	–	–	–	–
110	–	–	–	–	22	589	–	–	–	–	–	–
125	29	589	29	589	29	589	15	317	–	–	–	–
150	–	–	–	–	35	427	–	–	–	–	–	–
160	40	427	40	427	–	–	25	317	25	317	19.7	256
175	–	–	–	–	37	332	–	–	–	–	–	–
200	48	332	48	332	48	332	40	317	40	317	30.7	256
225	–	–	–	–	46	310	–	–	–	–	–	–
250	57	310	–	–	57	310	59.4	317	59.4	317	48	256

				NZM1, PN1, N1, NS1 160 A	I_n[1] A	NZM2, PN2, N2, NS2 250 A	I_n[1] A	NZM3, PN3, N3, NS3 630 A	I_n[1] A
Terminal capacities									
Standard equipment				Box terminal		Screw terminal		Screw terminal	
Accessories				Screw connection Tunnel terminal Connection on rear		Box terminal Tunnel terminal Connection on rear		Box terminal Tunnel terminal Connection on rear	
Rated power of coil									
Box terminal	Solid		mm²	1 × (10 – 16) 2 × (6 – 16)	160	1 × (4 – 16) 2 × (4 – 16)	250	2 × 16	500
	Stranded		mm²	1 × (25 – 70) 2 × 25		1 × (25 – 185) 2 × (25 – 70)	250	1 × (35 – 240) 2 × (25 – 120)	
Tunnel terminal	Solid Stranded		mm²	1 × 16	160	1 × 16	250		
		Single hole	mm²	1 × (25 – 95)		1 × (25 – 185)		1 × (25 – 185)	350
		Double hole fitting	mm²	–	–	–	–	1 × (50 – 240) 2 × (50 – 240)	630 2 x 185
		4-hole	mm²	–	–	–	–	–	–
Bolt terminal and rear-side connection									
Direct on the switch	Solid		mm²	1 × (10 – 16) 2 × (6 – 16)	160	1 × (4 – 16) 2 × (4 – 16)	250	1 × 16 2 × 16	630 2 x 185
	Stranded		mm²	1 × (25 – 70)[3] 2 × 25		1 × (25 – 185) 2 × (25 – 70)		1 × (25 – 240) 2 × (25 – 240)	
Module plate	Single hole	min.	mm²	–	–	–	–	–	–
		max.	mm²	–	–	–	–	–	–
Module plate	Double hole	min.	mm²	–	–	–	–	–	–
		max.	mm²	–	–	–	–	–	–
Connection width extension			mm²					2 × 300	630 2 × 185
Al conductors, Al cable									
Tunnel terminal	Solid Stranded		mm²	1 × 16	160	1 × 16	250	1 × 16	350
		Single hole	mm²	1 × (25 – 95)		1 × (25 – 185)		1 × (25 – 185)[2]	
		Double hole fitting	mm²	–	–	–	–	1 × (50 – 240) 2 × (50 – 240)	630
		4-hole	mm²	–	–	–	–	–	–
Bolt terminal and rear-side connection									
Direct on the switch	Solid		mm²	1 × (10 – 16) 2 × (10 – 16)	160	1 × (10 – 16) 2 × (10 – 16)	250	1 × 16 2 × (10 – 16)	400
	Stranded		mm²	1 × (25 – 35) 2 × (25 – 35)		1 × (25 – 50) 2 × (25 – 50)		1 × (25 – 120) 2 × (25 – 120)	
Module plate	Single hole	min.	mm²	–	–	–	–	–	–
	Single hole	max.	mm²	–	–	–	–	–	–
Module plate	Double hole		mm²	–	–	–	–	–	–
Connection width extension			mm²						
Cu strip (number of segments x width x segment thickness)									
Box terminal		min.	mm	2 × 9 × 0.8	160	2 × 9 × 0.8	250	6 × 16 × 0.8	630
		max.	mm	9 × 9 × 0.8		10 × 16 × 0.8		10 × 24 × 1.0 + 5 × 24 × 1.0 (2 ×) 8 × 24 × 1.0	
Flat conductor terminal		min.	mm						
		max.	mm						
Module plate	Single hole		mm	–	–	–	–	–	–
Bolt terminal and rear-side connection									
Flat copper strip, with holes		min.	mm			2 × 16 × 0.8	250	6 × 16 × 0.8	630
Flat copper strip, with holes		max.	mm			10 × 16 × 0.8		10 × 32 × 1.0 + 5 × 32 × 1.0	
Connection width extension			mm²	–	–	–	–	(2 ×) 10 × 50 × 1.0	
Copper busbar (width × thickness)									
Bolt terminal and rear-side connection									
Screw connection				M6		M8		M10	
Direct on the switch		min.	mm	12 × 5	160	16 × 5	250	20 × 5	630
		max.	mm	16 × 5		20 × 5		30 × 10 +30 × 5	
Module plate	Single hole	min.	mm	–	–	–	–	–	–
		max.	mm	–	–	–	–	–	–
Module plate	Double hole		mm	–	–	–	–	–	–
Connection width extension		min.	mm	–	–	–	–	–	630
		max.	mm	–	–	–	–	2 × (10 × 50)	10 × 40

Notes

[1] The rated currents I_n have been determined conform to IEC/EN 60947 (switchgear standard) and generally relate to the max. defined cross-sections and are intended for the purpose of orientation. The engineering standards which apply in each case must be observed.
[2] depending on the cable manufacturer up to 240 mm² can be connected.
[3] depending on the cable manufacturer up to 95 mm² can be connected.

NZM4, N4, NS4 1600 A	I_n[1] A		NZM…1…NA, NS1…NA	NZM…2…NA, NS2…NA	NZM…3…NA, NS3…NA	NZM…4…NA, NS4…NA
Screw terminal			Box terminal	Screw terminal	Screw terminal	Screw terminal
Tunnel terminal Connection on rear Strip terminal			Screw connection Tunnel terminal Connection on rear	Box terminal Tunnel terminal Connection on rear	Box terminal Tunnel terminal Connection on rear	Tunnel terminal Connection on rear Strip terminal
		AWG	1 × (12 … 6)	1 × (12 … 6)	–	
		AWG/kcmil	1 × (4 … 2/0)	1 × (4 … 350)	1 × (2 – 500)	
		AWG	1 × 6	1 × 6	1 × 6	
		AWG/kcmil	1 × (4 … 3/0)	1 × (4 – 350)	1 × (4 – 350)	
–	–	AWG/kcmil	–	–	1 × (0 – 500) 2 × (0 – 500)	–
4 × (50 – 240)	1400	AWG/kcmil	–	–	–	4 × (0 – 500)
		AWG	1 × (12 … 6) 2 × (9 … 6)	1 × (12 – 6)	–	
1 × (120 … 185) 4 × (50 … 185)	1250	AWG/kcmil	1 × (4 … 2/0)	1 × (4 … 3/0)	1 × (4 – 350) 2 × 350	1 × (250 … 350) 4 × (0 … 350)
1 × (120 – 300)	1000	kcmil	–	–	–	1 × (250 – 600)
2 × (95 – 300)		AWG/kcmil	–	–	–	2 × (3/0 – 600)
2 × (95 – 185)	1400	AWG/kcmil	–	–	–	2 × (3/0 – 350)
4 × (35 – 185)		AWG/kcmil	–	–	–	4 × (2 – 350)
4 × 300 6 × (95 – 240)	1600 4 × 240	AWG/kcmil			2 × 500	4 × 600 6 × (3/0 – 500)
–	–	AWG	–	–	–	–
–	–	AWG/kcmil	–	–	–	–
–	–	AWG/kcmil	–	–	–	–
4 × (50 – 240)	1400	AWG/kcmil	–	–	–	–
–	–	AWG	–	–	–	–
–	–	AWG/kcmil	–	–	–	–
1 × (185 – 240)	pleaes inquire	kcmil	–	–	–	–
2 × (70 – 185)	pleaes inquire	AWG/kcmil	–	–	–	–
4 × 50	–	AWG	–	–	–	–
2 × 240 6 × (70 – 240)	pleaes inquire	AWG/kcmil				–
–	–	mm	2 × 9 × 0.8	2 × 9 × 0.8	6 × 16 × 0.8	–
–	–	mm	9 × 9 × 0.8	10 × 16 × 0.8	10 × 24 × 1.0 + 5 × 24 × 1.0 (2 ×) 8 × 24 × 1.0	–
6 × 16 × 0.8	1100	mm				6 × 16 × 0.8
(2 ×) 10 × 32 × 1.0		mm				(2 ×) 10 × 32 × 1.0
(2 ×) 10 × 50 × 1.0	1250 (2 ×) 10 × 40 × 1.0	mm	–	–	–	(2 ×) 10 × 50 × 1.0
(2 ×) 10 × 50 × 1.0	1600	mm		2 × 16 × 0.8	6 × 16 × 0.8	(2 ×) 10 × 50 × 1.0
(2 ×) 10 × 50 × 1.0		mm		10 × 16 × 0.8	10 × 32 × 1.0 + 5 × 32 × 1.0	(2 ×) 10 × 50 × 1.0
(2 ×) 10 × 80 × 1.0	1600 2 × (10 × 50 × 1.0)	mm	–	–	(2 ×) 10 × 50 × 1.0	(2 ×) 10 × 80 × 1.0
M10			M6	M8	M10	M10
25 × 5	1600	mm	12 × 5	16 × 5	20 × 5	25 × 5
2 × (50 × 10) 2 × (80× 10)	2000	mm	16 × 5	20 × 5	30 × 10 + 30 × 5	2 × (50 × 10)
25 × 5	1250 2 × (40 × 10)	mm	–	–	–	25 × 5
2 × (50 × 10)		mm	–	–	–	2 × (50 × 10)
2 × (50 × 10)	1500	mm	–	–	–	2 × (50 × 10)
60 × 10	1600 2 × (50 × 10)	mm	–	–	–	60 × 10
2 × (80 × 10)		mm	–	–	2 × (10 × 50)	2 × (80 × 10)

		at AC = 50/60 Hz		M22-K…	NZM-XHIV	NZM-XHI
Auxiliary contacts						
Rated operational voltage						
AC		U_e	V AC	500	500	500
DC		U_e	V DC	220	220	220
Conventional thermal current		$I_{th} = I_e$	A	4	4	4
Rated operational current						
AC–15	115 V	I_e	A	4	4	4
	230 V	I_e	A	4	4	4
	400 V	I_e	A	2	2	2
	500 V	I_e	A	1	1	1
DC-13	24 V	I_e	A	3	3	3
	42 V	I_e	A	1.7	1.5	–
	60 V	I_e	A	1.2	0.8	1.2
	110 V	I_e	A	0.8	0.5	0.5
	220 V	I_e	A	0.3	0.2	0.2
Short-circuit protection						
max. fuse			A gG/gL	10	10	10
Max. miniature circuit-breaker			A	PKZM0-10/FAZ-B6	FAZ-B6	FAZ-B6
Early-make time compared to the main contacts during switch on and off (switching times with manual operation)			ms		NZM1, PN1, N(S)1: approx. 20 NZM2, PN2, N(S)2: approx. 20 NZM3, PN3, N(S)3: approx. 20 NZM4, N(S)4: approx. 90 With NZM4/N(S)4 the HIV does **not** feature early break.	
Terminal capacities						
Solid or flexible conductor with ferrule			mm²	1 × (0.75 – 2.5) 2 × (0.75 – 2.5)	1 × (0.75 – 2.5) 2 × (0.75 – 2.5)	1 × (0.75 – 2.5) 2 × (0.75 – 2.5)
			AWG	1 × (18 – 14) 2 × (18 – 14)	1 × (18 – 14) 2 × (18 – 14)	1 × (18 – 14) 2 × (18 – 14)
UL/CSA						
Rated operational current		I_e	A	10 A … 600 V AC 1 A … 250 V DC	2.5 A – 240 V AC 1 A – 250 V DC	2.5 A – 240 V AC 1 A – 250 V DC
Heavy Pilot Duty				A600/P300 above 300 V AC same polarity	C300/R300	C300/R300

Maximum equipment and position of the internal accessories

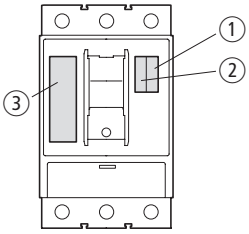

	③ -XHIV(2S) or -XA or -XU	② HIA	① HIN	Contacts per slot with HIA and HIN
NZM1, N(S)1	1	1	1	1 N/O
NZM2, N(S)2	1	1	2	1 N/C
NZM3, N(S)3	1	1	3	2 N/O
NZM4, N(S)4	1	2	3	2 N/C
PN1	1	–	1	1 N/O, 1 N/C
PN2	1	–	2	N/O = normally open contact
PN3	1	–	3	N/C = normally closed contact

Time differences ON-OFF

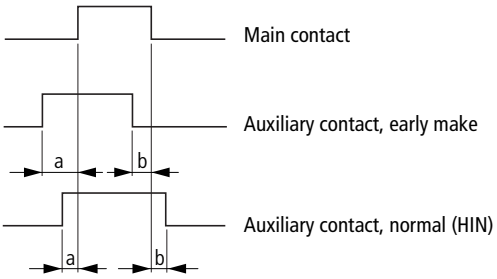

	Time difference a (ms)						Time difference b (ms)					
	Manual operation			Motor operators			Manual operation			Motor operators		
	HIV	HIN		HIV	HIN		HIV	HIN		HIV	HIN	
		K10	K01		K10	K01		K10	K01		K10	K01
NZM1	20[2)]	0	2.5	–	–	–	20[2)]	0	2.5	–	–	–
NZM2	20[2)]	3.5	6.5	Not permissibl	2.5	4.5	20[2)]	3	4.5	Not permissibl	3	4
NZM3	20[2)]	4	8	Not permissibl	2	4	20[2)]	3.5	8	Not permissibl	3	6.5
NZM4	90[2)]	7	11	Not permissibl	on request	on request	0[1)2)]	12	15	Not permissibl	on request	on request

Notes
[1)] With NZM4/N(S)4 the HIV does **not** feature early break.
[2)] Minimum value, as it is dependent on the switching speed

			NZM1(2/3)-XU...	NZM4-XU…
Undervoltage release				
Rated control voltage				
Alternating voltage at 50/60 Hz	U_s	V AC	24…600	24…600
DC	U_s	V DC	12…250	12…250
Operating range				
Drop-out voltage		× U_s	0.35 – 0.7	0.35 – 0.7
Pick-up voltage		× U_s	0.85 – 1.1	0.85 – 1.1
Power consumption				
AC				
Pick-up AC		VA	1.5	3.6
Sealing AC		VA	1.5	3.6
DC				
Pick-up DC		W	0.8	2.5
Sealing DC		W	0.8	2.5
Max. opening delay (response time until the main circuits open)		ms	19	23
Minimum command time		ms	10 – 15	10 … 15
Terminal capacities				
Solid or flexible conductor with ferrule		mm²	1 × (0.75 … 2.5) 2 × (0.75 … 2.5)	1 × (0.75 … 2.5) 2 × (0.75 … 2.5)
		AWG	1 × (18 … 14) 2 × (18 … 14)	1 × (18 … 14) 2 × (18 … 14)

			UVU-NZM
Undervoltage releases, off-delayed			
Rated operational voltage			
Alternating voltage at 50/60 Hz	U_e	V AC	24, 220 – 550
DC	U_e	V DC	24
Inrush current (peak value)	I_e	mA	< 500
Power consumption		VA	50
Delay time	t_{sd}	ms	70 – 4000
With additional external capacitor, 90.000 µF ≧ 35 V		s	To 16
With additional external capacitor, 30.000 µF ≧ 35 V		s	To 8
Terminal capacities			
Solid or flexible conductor with ferrule		mm²	1 × (0.5 – 2.5) 2 × (0.5 – 1.5)

			NZM1(2/3)-XA...	NZM4-XA...	NZM2/3-XA...-MNS	NZM4-XA…-MNS
Shunt release						
Rated control voltage						
AC	U_s	V AC	12…440	12…440	230	230
DC	U_s	V DC	12…440	12…440		
Frequency range		Hz	0 – 400	0 – 400	50/60	50/60
Operating range						
AC		× U_s	0.7…1.1	0.7…1.1	0.1…1.1	0.1…1.1
DC		× U_s	0.7…1.1	0.7…1.1		
Power consumption						
Pick-up AC/DC		VA/W	2.5	2.5	–	–
Sealing AC/DC		VA/W	2.5	2.5	–	–
Maximum current consumption at 110% U_s (230 V 50 Hz)		A	–	–	0.5	1
Max. opening delay (response time until the main circuits open)		ms	20	22	20	22
Duty factor		ms	∞	∞	1000 ms	1000 ms
Minimum command time		ms	10 … 15	10 … 15	10 … 15	10 … 15
Terminal capacities						
Solid or flexible conductor with ferrule		mm²	1 × (0.75 … 2.5) 2 × (0.75 … 2.5)	1 × (0.75 … 2.5) 2 × (0.75 … 2.5)	1 × (0.75 … 2.5) 2 × (0.75 … 2.5)	1 × (0.75 … 2.5) 2 × (0.75 … 2.5)
		AWG	1 × (18 … 14) 2 × (18 … 14)	1 × (18 … 14) 2 × (18 … 14)	1 × (18 … 14) 2 × (18 … 14)	1 × (18 … 14) 2 × (18 … 14)

			NZM-XCM
Capacitor unit for shunt release			
Rated operational voltage	U_e	V AC	230
Rated operational current	I_e	mA	< 10
Inrush current (peak value)	I_e	A	3
Terminal capacities			
Solid or flexible conductor with ferrule		mm²	1 × (0.5 – 2.5) 2 × (0.5 – 1.5)
		AWG	1 × (20 – 14) 2 × (20 – 16)

				NZM2-XR...	NZM3-XR...	NZM4-XR…
Remote operator						
Rated control voltage						
AC		U_s	V AC	110…440	110…440	110…440
DC		U_s	V DC	24…250	24…250	24…250
Operating range						
AC		U_s		0.85…1.1	0.85…1.1	0.85…1.1
DC		U_s		0.85…1.1	0.85…1.1	0.85…1.1
Motor rating						
AC	110 … 130 V AC		VA	350	350	350
	208 … 240 V AC		VA	350	350	350
	380 … 440 V AC		VA	350	350	350
DC	24 … 30 V DC		W	250	250	250
	110 … 130 V DC		W	250	250	250
	220 … 250 V DC		W	250	250	250
Rated power of coil						
AC	110 … 130 V AC		VA	270	270	270
	208 … 240 V AC		VA	270	270	270
	380 V … 440 V AC		VA	270	270	270
DC	24 … 30 V DC		W	210	210	210
	100 … 130 V DC		W	210	210	210
	220 … 250 V DC		W	210	210	210
Total make time			ms	60	80	100
Total opening delay			ms	300	1000	3000
Minimum signal duration						
with switch on			ms	30	30	30
with switch off			ms	150	250	500
Lifespan, mechanical		Operations		20000	15000	10000
Maximum operating frequency			Ops./h	120	60	20
Terminal capacities						
Solid or flexible conductor with ferrule			mm²	0.75 … 2.5	0.75 … 2.5	0.75 … 2.5
			AWG	18 … 14	18 … 14	18 … 14

			DMI
General			
Dimensions (W × H × D)		mm	107.5 × 90 × 53
Modular spacing (space units)			6 space units wide
Weight		kg	0.3
Mounting			Top-hat rail IEC/EN 60715, 35 mm
Climatic environmental conditions			
Operating ambient temperature		°C	0 to +55
Mounting position			horizontal, vertical
Condensation			Prevent condensation by means of suitable measures
LCD display (clearly legible)		°C	0 to +55
Storage/Transport		°C	-40 to +70
Relative humidity, non-condensing (IEC/EN 60068-2-30)		%	5…95
Air pressure (operation)		hPa	795…1080
Corrosion resistance			
IEC/EN 60068-2-42	4 days SO_2	cm^3/m^3	10
IEC/EN 60068-2-43	4 days H_2S	cm^3/m^3	1
Ambient conditions, mechanical			
Pollution degree			2
Degree of protection IEC/EN 60529			IP20
Vibrations (IEC/EN 60068-2-6)			
Constant amplitude 0.15 mm		Hz	10…57
Constant acceleration 2 g		Hz	57…150
Mechanical shock resistance (IEC/EN 60068-2-27) semi-sinusoidal 15 g/11 ms		Impacts	18
Drop to IEC/EN 60068-2-31	Drop height	mm	50
Free fall, packaged (IEC/EN 60068-2-32)		m	1
Power supply			
Rated operational voltage	U_e	V	24
Admissible range		V DC	20.4…28.8
Residual ripple		%	≦ 5
Input current at 24 V DC		mA	210
Voltage dips (IEC/EN 61131-2)		ms	10
Heat dissipation at 24 V DC		W	5

			EASY221-CO	EASY222-DN	NZM-XDMI-DPV1
General					
Standards and regulations			EN 55011, EN 55022, EN 61000-4, IEC 60068-2-6, IEC 60068-2-27		
Dimensions (W × H × D)		mm	35.5 × 90 × 58 (2 space units)	35.5 × 90 × 58 (2 space units)	35.5 × 90 × 58 (2 space units)
Weight		kg	0.15	0.15	0.15
Mounting			Top-hat rail EN 50022, 35 mm or screw fixing using fixing brackets ZB4-101-GF1 (accessories)		
Terminal capacity					
Solid		mm^2	0.2 / 4 (AWG 22 – 12)	0.2 / 4 (AWG 22 – 12)	0.2 / 4 (AWG 22 – 12)
Flexible with ferrule		mm^2	0.2 / 2.5 (AWG 22 – 12)	0.2 / 2.5 (AWG 22 – 12)	0.2 / 2.5 (AWG 22 – 12)
Standard screwdriver		mm	3.5 × 0.8	3.5 × 0.8	3.5 × 0.8
Max. tightening torque		nm	0.6	0.6	0.6
Ambient climatic conditions					
Operational ambient temperature		°C	-25 to 55, low temperatures to IEC 60068-2-1, high temperatures to IEC 60068-2-2		
Condensation			Prevent condensation with suitable measures		
Storage		°C	40 – 70	40 – 70	40 – 70
Relative humidity, non-condensing (IEC/EN 60068-2-30)		%	5 – 95	5 – 95	5 – 95
Air pressure (in operation)		hPa	795 – 1080	795 – 1080	795 – 1080
Corrosion resistance					
IEC/EN 60068-2-42	4 days SO_2	cm^3/m^3	10	10	10
IEC/EN 60068-2-43	4 days H_2S	cm^3/m^3	1	1	1
Ambient mechanical conditions					
Pollution degree			2	2	2
Degree of protection (IEC/EN 60529)			IP20	IP20	IP20
Vibrations (IEC/EN 60068-2-6)					
Constant amplitude 0.15 mm		Hz	10 – 57	10 – 57	10 – 57
Constant acceleration 2 g		Hz	57 – 150	57 – 150	57 – 150
Mechanical shock resistance (IEC/EN 60068-2-27) semi-sinusoidal 15 g/11 ms		Shocks	18	18	18
Drop to IEC/EN 60068-2-31	Drop height	mm	50	50	50
Free fall, packaged (IEC/EN 60068-2-32)		m	1	1	1
Mounting position			Horizontal/vertical	Horizontal/vertical	Horizontal/vertical
Electromagnetic compatibility (EMC)					
Electrostatic discharge (IEC/EN 61000-4-2, Level 3, ESD)					
Air discharge		kV	8	8	8
Contact discharge		kV	6	6	6
Electromagnetic fields (IEC/EN 61000-4-3, RFI)		V/m	10	10	10
Radio interference suppression (EN 55011)			EN 55011 Class B EN 55022 Class B		EN 55 011 Class A EN 55 022 Class A
Burst pulses (IEC/EN 61000-4-4, level 3)					
Power cables		kV	2	2	2
Signal cables		kV	2	2	2
High-energy pulses (surge) (IEC/EN 61000-4-5, level 2)		kV	0.5 (supply cables, symmetrical)		
Line-conducted interference (IEC/EN 61000-4-6)		V	10	10	10

			EASY221-CO	EASY222-DN	NZM-XDMI-DPV1
Insulation resistance					
Clearance and creepage distances			EN 50178, UL 508, CSA C22.2, No. 142		
Insulation resistance			EN 50178		
Power supply					
Rated operational voltage	U_e	V	24 (-15/+20 %)	24 (-15/+20 %)	24 (-15/+20 %)
Admissible range		V DC	20.4 – 28.8	20.4 – 28.8	20.4 – 28.8
Residual ripple		%	< 5	< 5	< 5
At 24 V DC		mA	typically 200	typically 200	Normally 200
Voltage dips (IEC/EN 61131-2)		ms	10	10	10
Heat dissipation at 24 V DC		W	4.8	4.8	4.8
Protection against polarity					
Power supply			Yes	Yes	Yes
LED displays					
Power supply			RUN LED (RUN): green	Module status LED (MS): green	Power LED (POW): green
LED display			LED ERROR (ERR): red	Network status LED (NS): red/green	PROFIBUS-DP LED (BUS): red
Network					
Connection types			RJ45	5-pole, pluggable screw terminal	SUB-D 9-pole, socket
Potential isolation			Between bus and power supply (simple), between bus and power supply and NZM-XDMI612 (safe isolation)	Between bus and power supply (simple), between bus and power supply and NZM-XDMI612 (safe isolation)	Between bus and power supply (simple), between bus and power supply and NZM-XDMI612 (safe isolation)
Function			CANopen slave	DeviceNet slave	PROFIBUS-DP slave
Interface			CAN	CAN	RS 485
Bus protocol			CANopen	DeviceNet	PROFIBUS-DP
Baud rates			Automatic search up to 1 MBitxs	Automatic search up to 500 kBitxs	Automatic search up to 12 MBitxs
Bus termination resistors			Separate external bus termination required (120 Ω) NZM-XDMI612	Separate external bus termination required (120 Ω) NZM-XDMI612	Separate external bus termination required
Bus addresses			1 … 127 addressed via display	0 … 63 addressed via display	1 … 126 via DMI
Services					
Cyclic			All data R1 – R16, S1 – S8	All data R1 – R16, S1 – S8	Status ON/Off, tripped (detailed), load early warnings, phase currents $I_1/I_2/I_3$[A], remote operator acutation, display/ operation NZM-XDMI612, inputs/outputs, motor starter functions
Acyclical			Read/write, real-time, summer-/ winter time, all the parameters of the easy function relay	Read/write, real-time, summer-/ winter time, all the parameters of the easy function relay	Display/match protection settings, event list, identification, hours of operation, switching operations, time

			PFR-003	PFR-03	PFR-5
Electrical					
Standards			IEC/EN 60947-2, IEC 755, IEC 1008, IEC 1009		
Sensitivity			Pulse current sensitive, type A		
Rated control voltage	U_s	V AC	230 ±20 % (50/60 Hz)		
Motor rating	P_e	W	3	3	3
Rated fault currents	$I_{\Delta n}$	mA	0.03	0.3	0.03, 0.1, 0.3, 0.5, 1, 3, 5
Delay time	t_v	s	0.02 (non-delayed)	0.02 (non-delayed)	0.02, 0.1, 0.3, 0.5, 1, 3, 5
Relay contacts			1 integrated changeover contact	1 integrated changeover contact	1 integrated changeover contact
Rated voltage of the relay contact		V AC/DC	250/100	250/100	250/100
Rated current of the relay contact		A	6	6	6
Fault current warning		Hz	–	–	0.5 = 25% – 50% $I_{\Delta n}$ 1 = 50% – 75% $I_{\Delta n}$ 2 = 75% – 100% $I_{\Delta n}$
Mechanical					
Standard front dimension		mm	45	45	45
Device height		mm	85	85	85
Device width		mm	45	45	45
Mounting			Snap fixing, top-hat rail DIN 46277, IEC/EN 60715		
Terminals top and bottom			Box terminals		
Terminal protection			Finger/back-of-hand proof to BGV A2, VDE 106 part 100		
Terminal capacities		mm^2	2 × 0.75 – 2.5 solid, 2 × 0.75 – 1.5 flexible/with ferrules		
Sealability				–	yes

xEnergy NZM…-XFI… Moeller HPL0211-2007/2008 http://catalog.moeller.net

			NZM1(-4)-XFI30R	NZM1(-4)-XFI300R	NZM1(-4)-XFIR	NZM1(-4)-XFI30U
Electrical						
Standards			IEC/EN 60947-2	IEC/EN 60947-2	IEC/EN 60947-2	IEC/EN 60947-2
Sensitivity			Pulse current sensitive according to core-balance principle			
Min. operating voltage						
or detection of fault currents type A/AC			80 V (dependent on mains voltage)	80 V (dependent on mains voltage)	80 V (dependent on mains voltage)	80 V (dependent on mains voltage)
or detection of fault currents type B						
Suitability for the application			In three- and single-phase systems			In single-phase
Rated operational voltage	U_e	V AC	200…415 (3~)	200…415 (3~)	200…415 (3~)	200…415 (3~)
Rated frequency	f	Hz	50/60	50/60	50/60	50/60
Number of poles			3/4	3/4	3/4	3/4
Rated current range	I_n	A	15…125	15…125	15…125	15…100
Rated fault currents	$I_{\Delta n}$	A	0.03	0.3	0.03…0.1…0.3…0.5…1…3	0.03
Detection range of the fault current			50/60 Hz	50/60 Hz	50/60 Hz	50/60 Hz
Rated ultimate short-circuit making capacity and -rated ultimate short-circuit breaking capacity	$I_{\Delta m}$	A	$= I_{CU}$	$= I_{CU}$	$= I_{CU}$	$= I_{CU}$
Fault current warning			$\geqq 0.3 \times I_{\Delta n}$	$\geqq 0.3 \times I_{\Delta n}$	$\geqq 0.3 \times I_{\Delta n}$	$\geqq 0.3 \times I_{\Delta n}$
Mechanical shock resistance (IEC 60068-2-27)			20 (half-sinusoidal shock 20 ms)			
Lifespan, mechanical (50 % with fault current)	Operations		20000	20000	20000	20000
Mechanical						
Standard front dimension		mm	45	45	45	45
Mounting			on the right side	sidewise on the right	Bottom	Bottom
Mounting position			Vertical and 90° in all directions			
Supply			NZM1 from above	NZM1 from above	NZM1 from above	NZM1 from above
Degree of protection			IP20 in the operating component area			
Ambient temperature		°C	–5…+40	–5…+40	–5…+40	–5…+40
Sealability					yes, setting buttons	
Terminal capacity						
Flexible without ferrule		mm²	such as NZM1 standard terminal			
flexible with ferrules		mm²	such as NZM1 standard terminal			

http://catalog.moeller.net Moeller HPL0211-2007/2008 NZM…-XFI… xEnergy

	NZM1(-4)-XFI300U	NZM1(-4)-XFIU	+NZM2-4-XFI30	+NZM2-4-XFI	+NZM2-4-XFIA30	+NZM2-4-XFIA
Electrical						
Standards	IEC/EN 60947-2	IEC/EN 60947-2	IEC/EN 60947-2	IEC/EN 60947-2	IEC/EN 60947-2	IEC/EN 60947-2
Sensitivity	Pulse current sensitive according to core-balance principle		Pulse current sensitive according to core-balance principle	Pulse current sensitive according to core-balance principle	Sensitive to AC/DC (type B)	Sensitive to AC/DC (type B)
Min. operating voltage						
or detection of fault currents type A/AC	80 V (dependent on mains voltage)	80 V (dependent on mains voltage)	independent of mains voltage	independent of mains voltage	0 V independent of mains voltage	0 V independent of mains voltage
or detection of fault currents type B					50 V (dependent on mains power)	50 V (dependent on mains voltage)
Suitability for the application	In single-phase		In three- and single-phase systems			
Rated operational voltage	200…415 (3~)	200…415 (3~)	280…690	280…690	50…400 (3~)	50…400 (3~)
Rated frequency	50/60	50/60	50/60	50/60	50/60	50/60
Number of poles	3/4	3/4	4	4	4-pole	4-pole
Rated current range	15…100	15…100	15…250	15…250	15…250	15…250
Rated fault currents	0.3	0.03…0.1…0.3…0.5…1…3	0.03	0.1…0.3…1…3	0.03	0.1…0.3…1
Detection range of the fault current	50/60 Hz	50/60 Hz	50/60 Hz	50/60 Hz	with AC voltage: 0 – 100 kHz with pulsed DC voltage: 50 Hz	with AC voltage: 0 – 100 kHz with pulsed DC voltage: 50 Hz
Rated ultimate short-circuit making capacity and -rated ultimate short-circuit breaking capacity	$= I_{CU}$	$= I_{CU}$	$= I_{CU}$	$= I_{CU}$	$= I_{CU}$	$= I_{CU}$
Fault current warning	$\geqq 0.3 \times I_{\Delta n}$	$\geqq 0.3 \times I_{\Delta n}$	–	–	–	–
Mechanical shock resistance (IEC 60068-2-27)	20 (half-sinusoidal shock 20 ms)					
Lifespan, mechanical (50 % with fault current)	20000	20000	$\geqq$ 2000	$\geqq$ 2000	$\geqq$ 2000	$\geqq$ 2000
Mechanical						
Standard front dimension	45	45	96	96	96	96
Mounting	Bottom	Bottom	Bottom	Bottom	Bottom	Bottom
Mounting position	Vertical and 90° in all directions					
Supply	NZM1 from above	NZM1 from above	As required	As required	Bottom	Bottom
Degree of protection	IP20 in the operating component area					
Ambient temperature	–5…+40	–5…+40	–25…+70	–25…+70	–25…+70	–25…+70
Sealability		yes, setting buttons			yes, setting buttons	yes, setting buttons
Terminal capacity						
Flexible without ferrule	such as NZM1 standard terminal		with NZM2 standard connection			
flexible with ferrules	such as NZM1 standard terminal		with NZM2 standard connection			

xEnergy **NZM1, PN1, N1, NS1** Moeller HPL0211-2007/2008 http://catalog.moeller.net

Circuit-breaker
Switch-disconnector
3 pole
NZMB1
NZMC1
NZMN1
NZMH1
PN1
N1
NS1

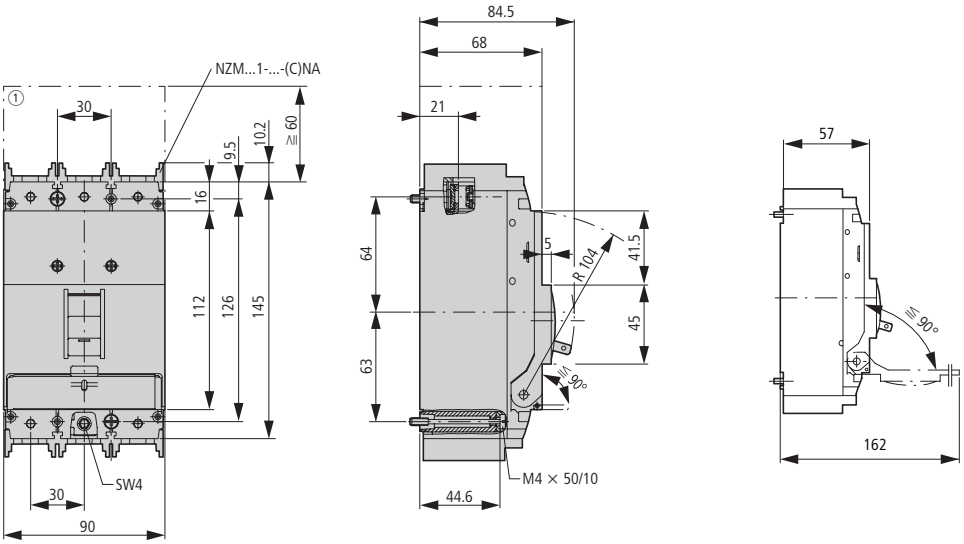

① Blow out area, minimum clearance to other parts ≧ 60 mm

Circuit-breaker
Switch-disconnector
4 pole
NZMB1-4
NZMN1-4
NZMH1-4
PN1-4
N1-4

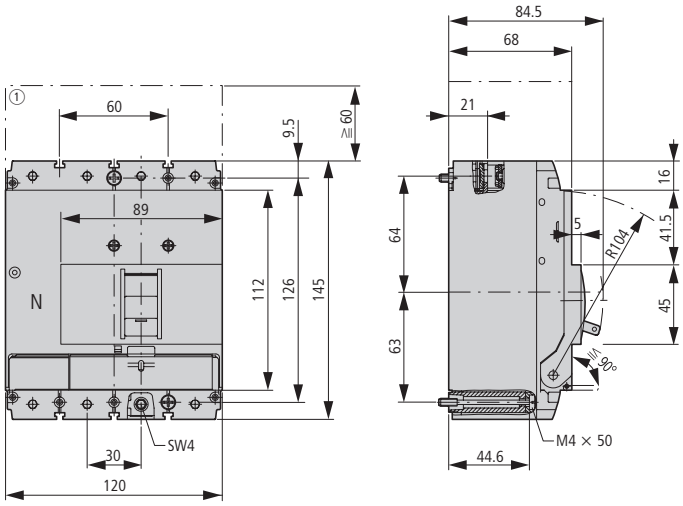

① Blow out area, minimum clearance to other parts ≧ 60 mm

Covers
NZM1(-4)-XKSA
Screw connection
NZM1(-4)-XKS
IP2X protection against contact with a finger for shroud
NZM1(-4)-XIPA
Screw connection

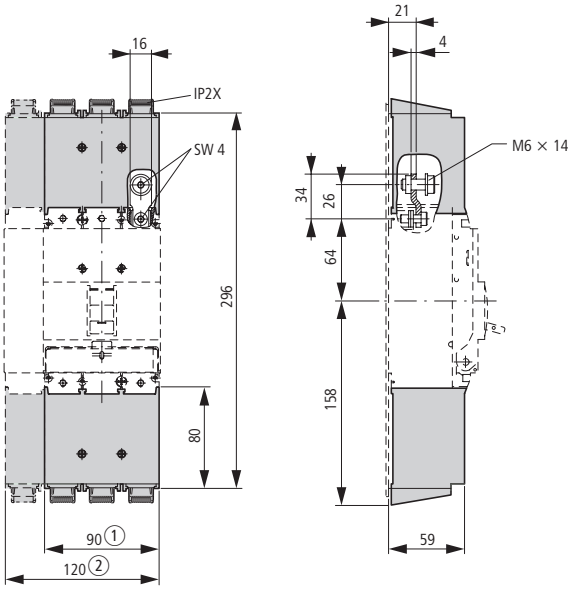

① 3 pole
② 4 pole

Tunnel terminal

NZM1(-4)-XKA

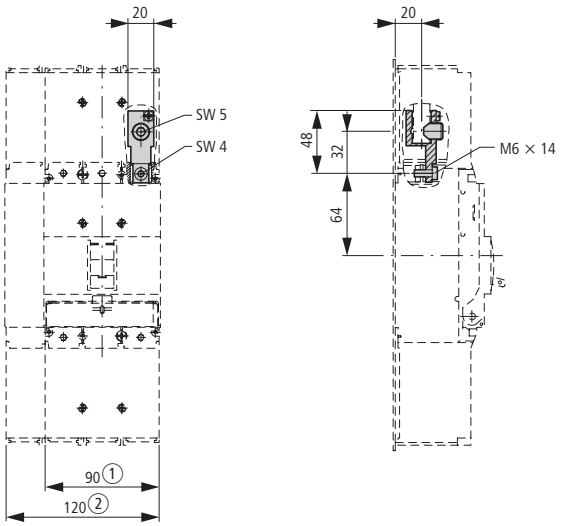

① 3 pole
② 4 poles

Connection on rear

NZM1(4)-XKR

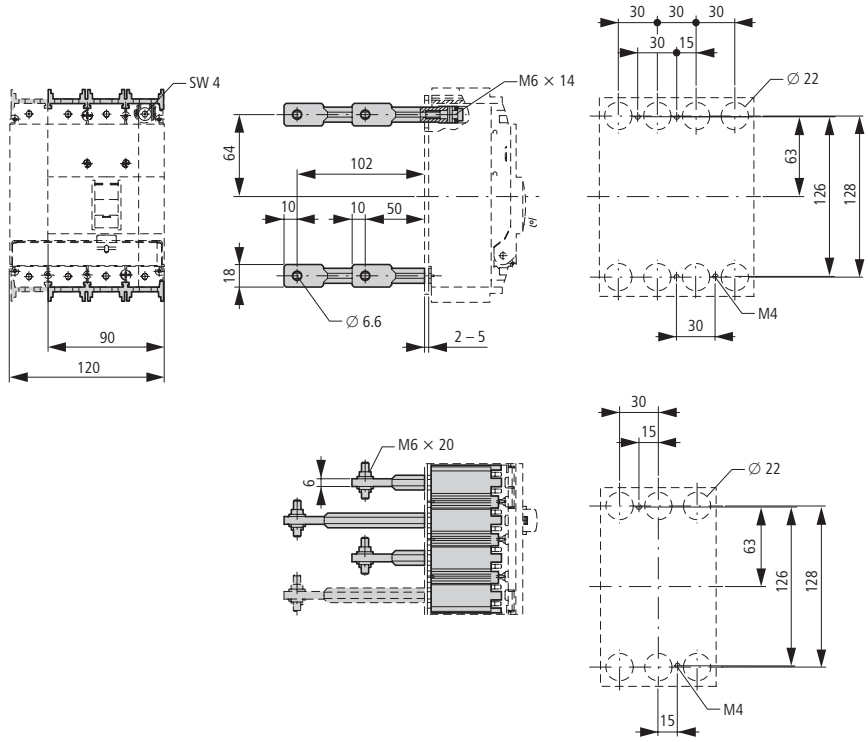

Control circuit terminal

NZM1-XIPK, NZM-XSTK

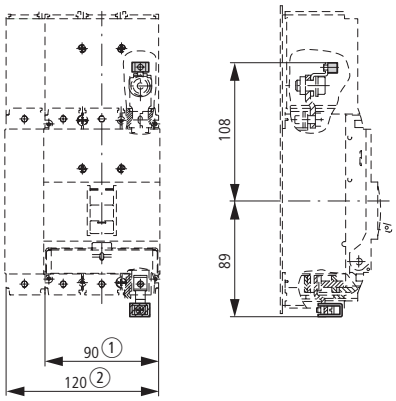

① 3 pole
② 4 poles

IP2X protection against contact with a finger

NZM1(-4)-XIPK

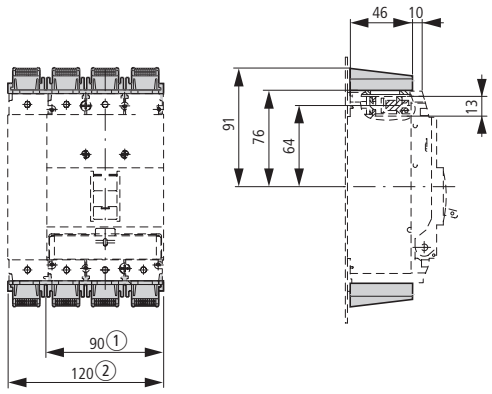

Rotary drive

Rotary handle on circuit-breaker

NZM1-XDV
NZM1-XDVR

NZM1-XDTV

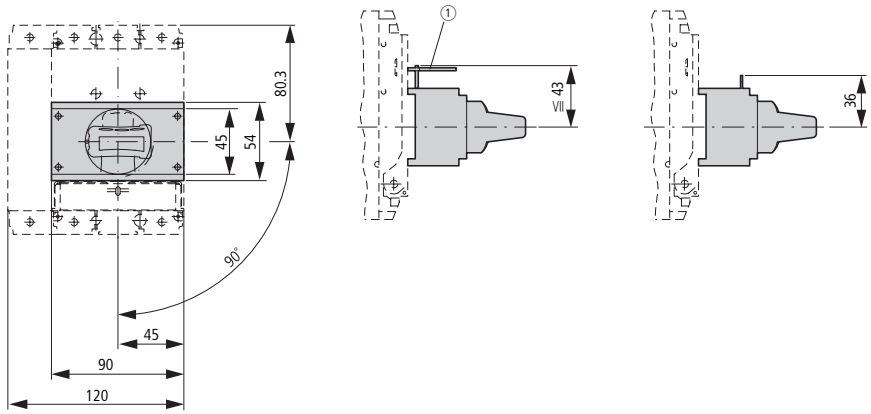

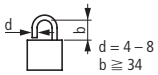

1 Up to 3 padlocks

Door coupling rotary handle

NZM1-XTVD(V)(R)(-NA)

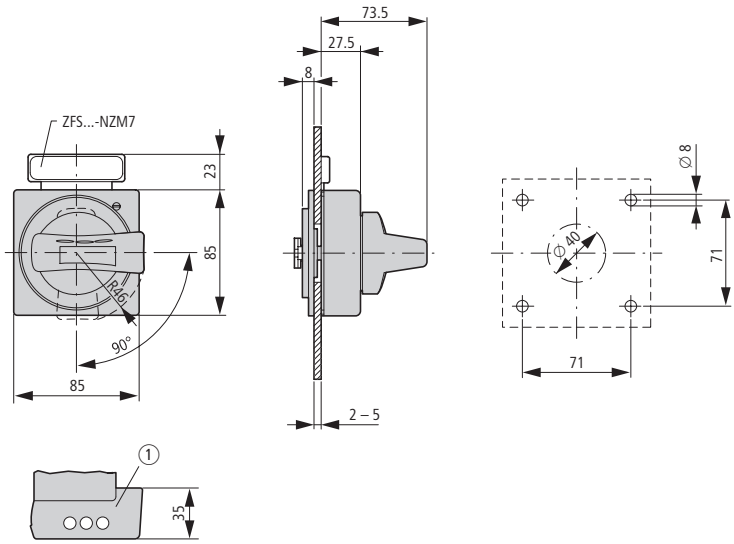

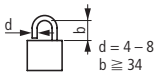

1 Up to 3 padlocks

Door coupling rotary handle with extension shaft

NZM1-XTVD(V)(R)(-NA)
NZM1/2-XV4(6)

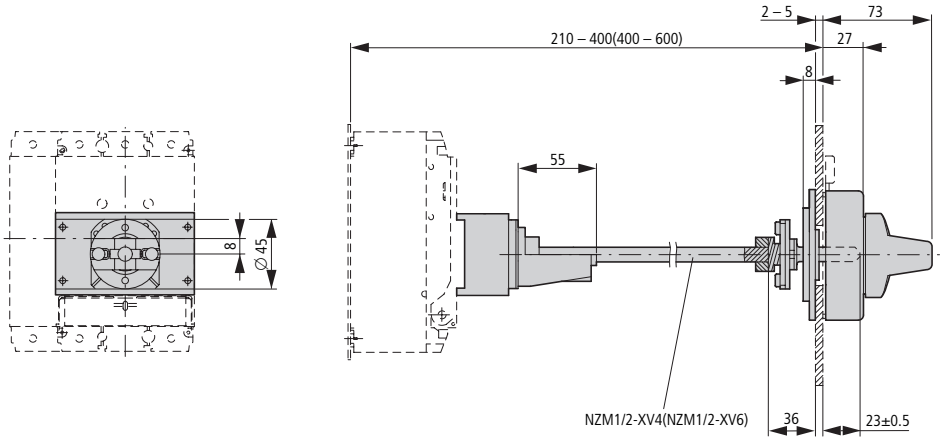

NZM1-XTVD(V)(R)-60(-NA)

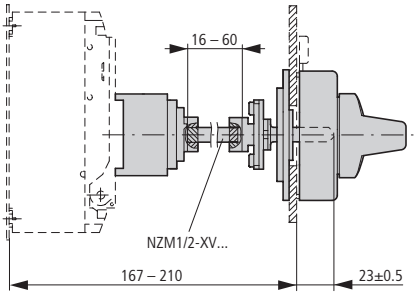

NZM1-XTVD(V)(R)-0(-NA)

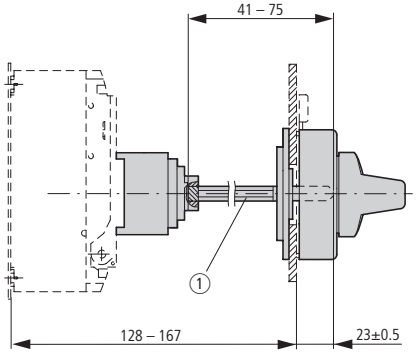

1 Special tip

Minimum door coupling rotary handle clearance from door pivot point

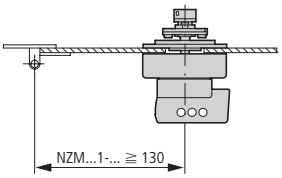

Main switch assembly kit for side panel mounting

NZM1-XS(R)-L

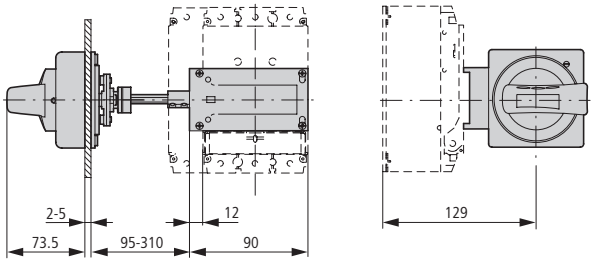

NZM1-XS(R)-R

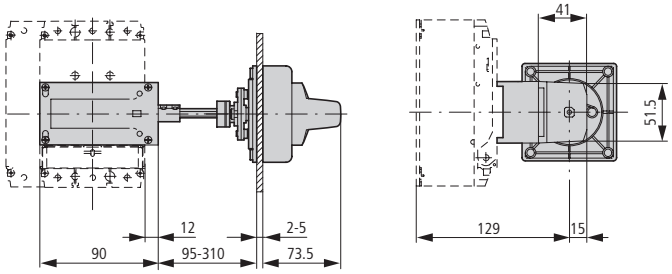

Main switch assembly kit for side panel mounting with mounting bracket

NZM1-XS(R)M-L

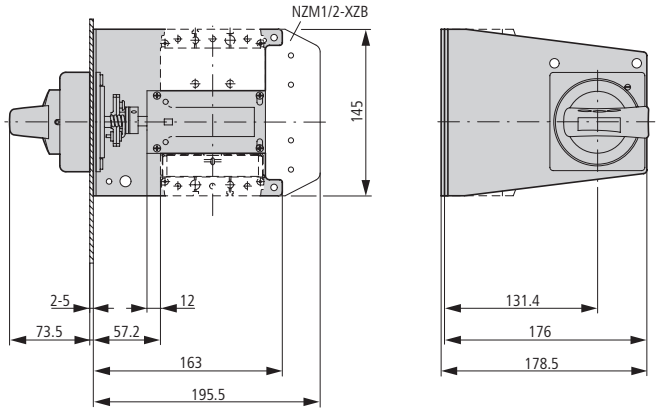

NZM1-XS(R)M-R

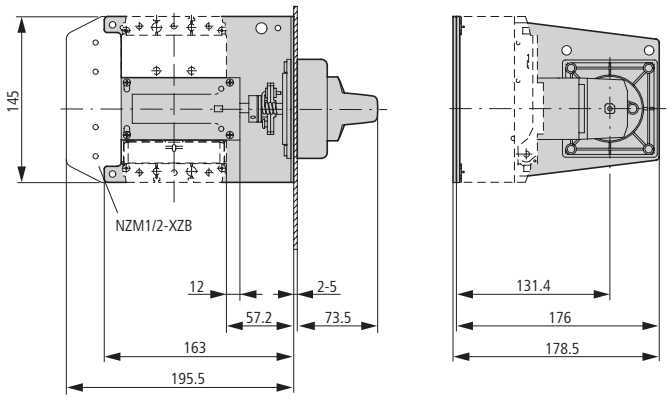

Undervoltage release
Shunt release
Early-make auxiliary contacts

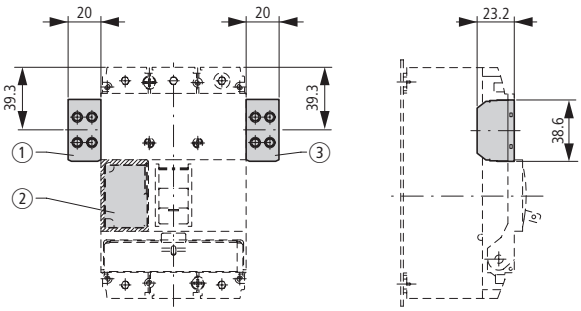

1
NZM1-XA(HIV)
NZM1-XU(HIV)(20)
NZM1-XHIV
2
NZM1-XA(HIV)(L)
NZM1-XU(V)(HIV)(L)(20)
NZM1-XHIV(L)
3
NZM1-XHIVR

Spacers

NZM1/2-XAB

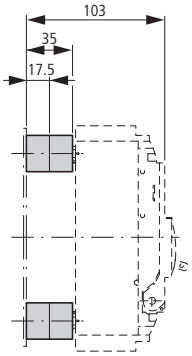

Clip plate

NZM1-XC35

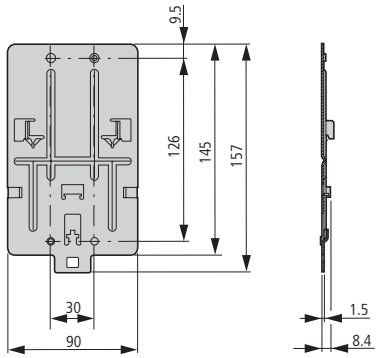

Insulating surrounds

NZM1-XBR

① Mounting aperture

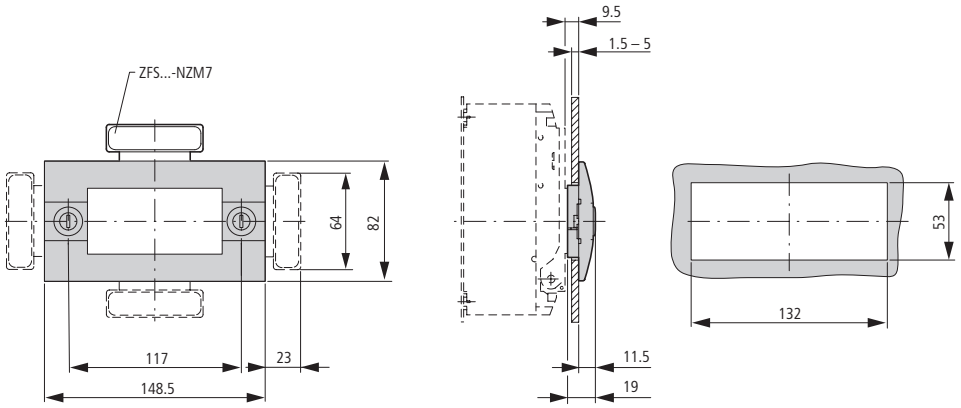

Rotary handle on switch with door interlock

NZM1-XDTV(R)

① Mounting aperture

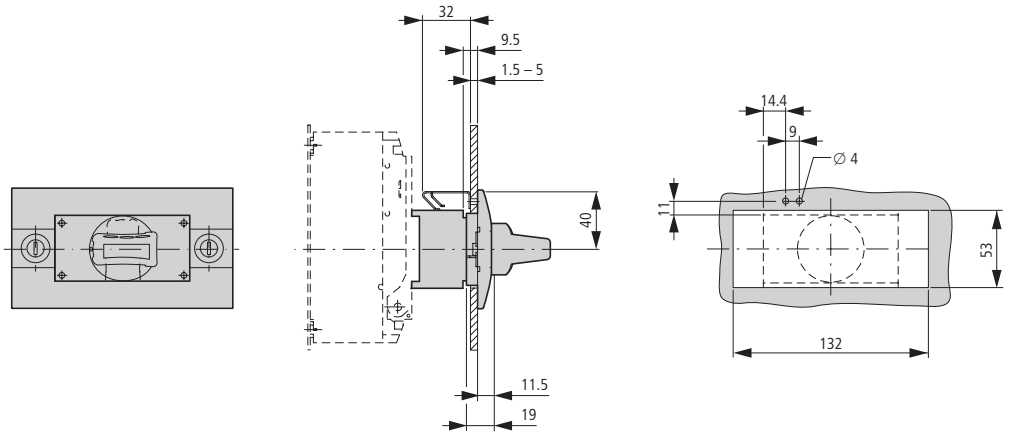

Rear drive

NZM1-XRAV(R)

NZM1-4-XRAV(R)

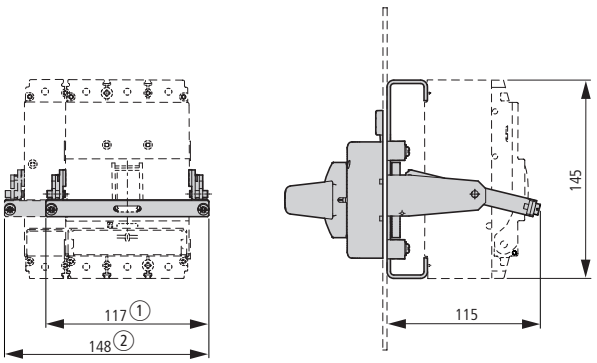

① NZM1-XRAV(R)
② NZM1-4-XRAV(R)

Toggle lever locking device

NZM-XKAV

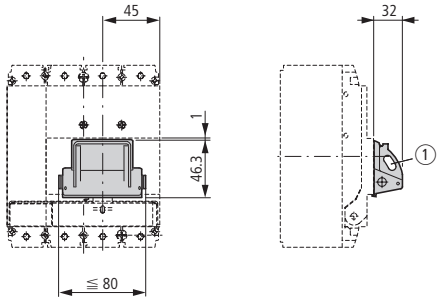

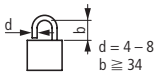

① Up to 3 padlocks

Mechanical interlock

NZM1-XMV + NZM1-XDV(R)

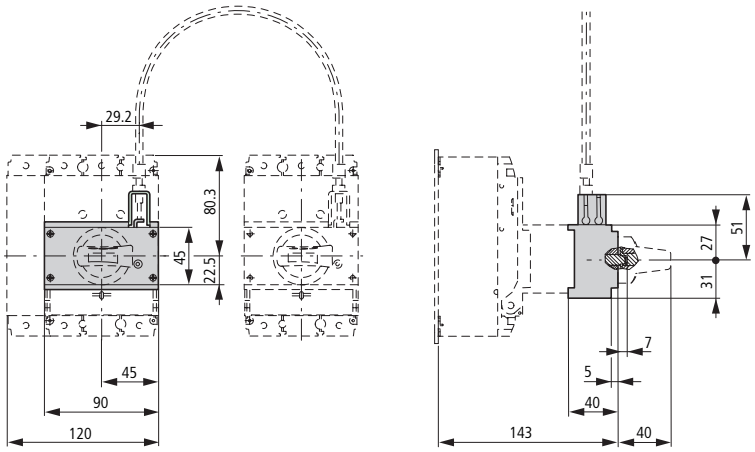

NZM1-XMV + NZM1-XTVD(V)(R)

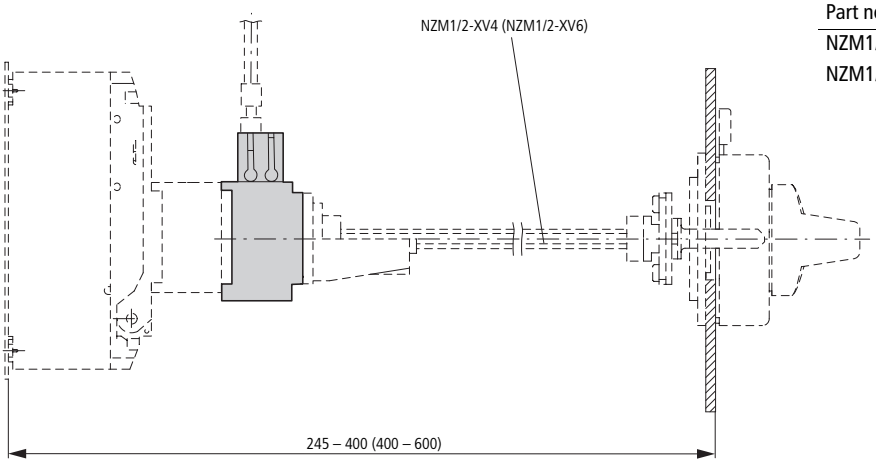

Part no.	x
NZM1/2-XV4	245 – 400
NZM1/2-XV6	400 – 600

NZM1-XMV + NZM1-XTVD(V)(R)-60

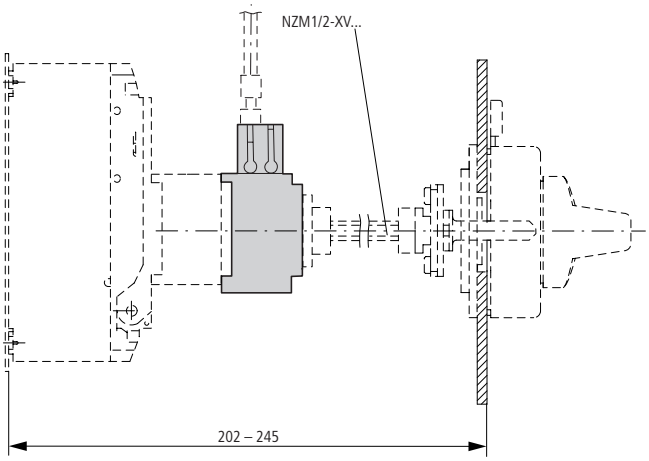

NZM1-XMV + NZM1-XTVD(V)(R)-0

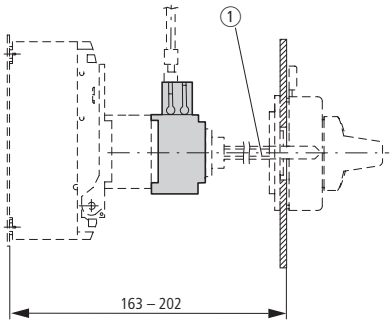

1 Special tip

Paralleling mechanism

PN1-XPA

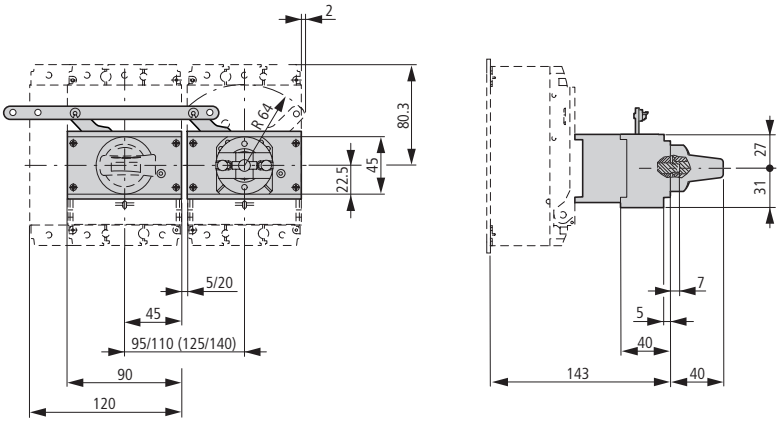

PN1-XPA

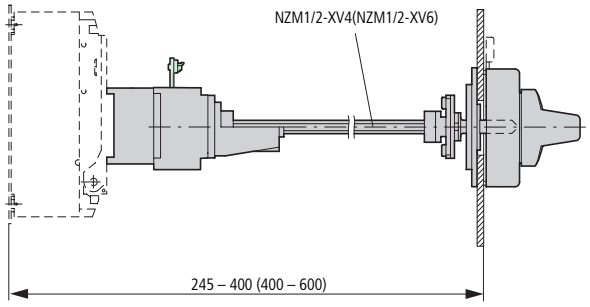

Insulated enclosures

NZM1-XCIK5-T...

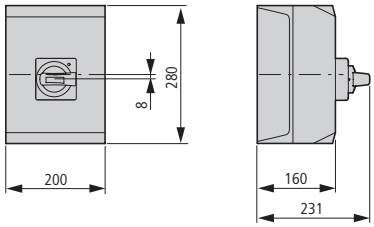

NZM1-XCI23-T...

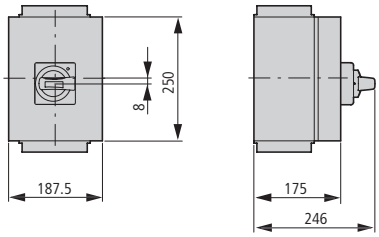

NZM1-XCI43-T...

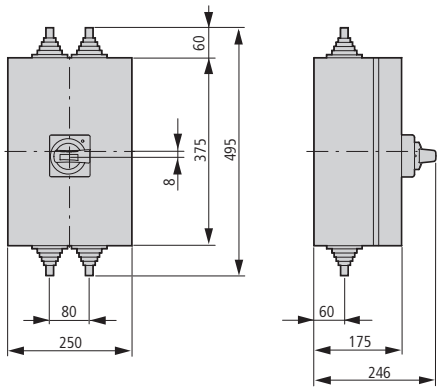

NZM1-XCI43/2-T...

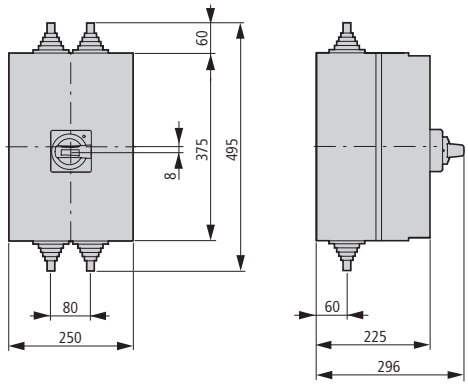

Component adapter

NZM1-XAD160

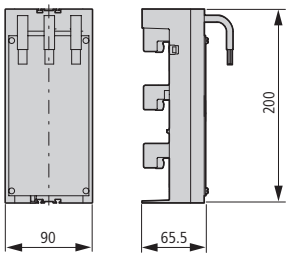

Residual-current relay

PFR-003
PFR-03
PFR-5

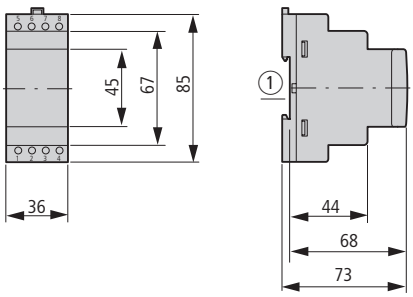

Current transformer

PFR-W-20…30

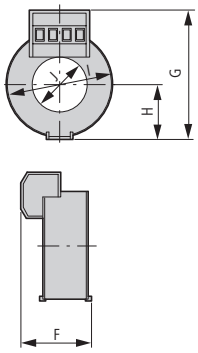

PFR-W-35...210

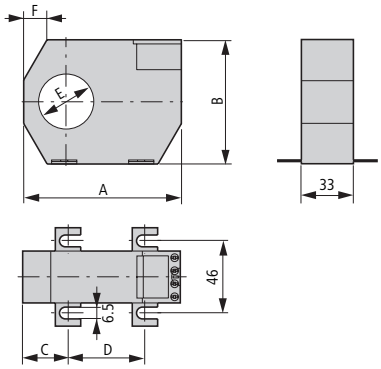

Part no.	A	B	C	D	E	F
PFR-W-35	100	79	26	48.5	35	35
PFR-W-70	130	110	32	66	70	52
PFR-W-105	170	146	38	94	105	72
PFR-W-140	220	196	48.5	123	140	97
PFR-W-210	299	284	69	161	210	141

	F	G	H	I	J
PFR-W-20	32	60	24	46	21
PFR-W-30	32	70	30	59	30

Fixing clip

PFR-WC

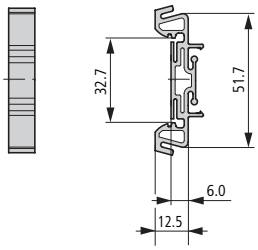

PFR-WMA

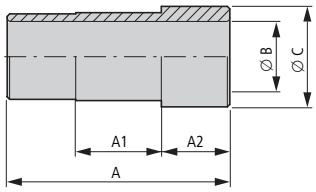

Part no.	A	ØB	ØC	A1	A2
PFR-WMA-35	91	28	40	35	28
PFR-WMA-70	105	62	75	35	35
PFR-WMA-105	153	98	110	35	60
PFR-WMA-140	153	133	145	35	60
PFR-WMA-210	153	203	215	35	60

Residual-current release

NZM1(-4)-XFI...R

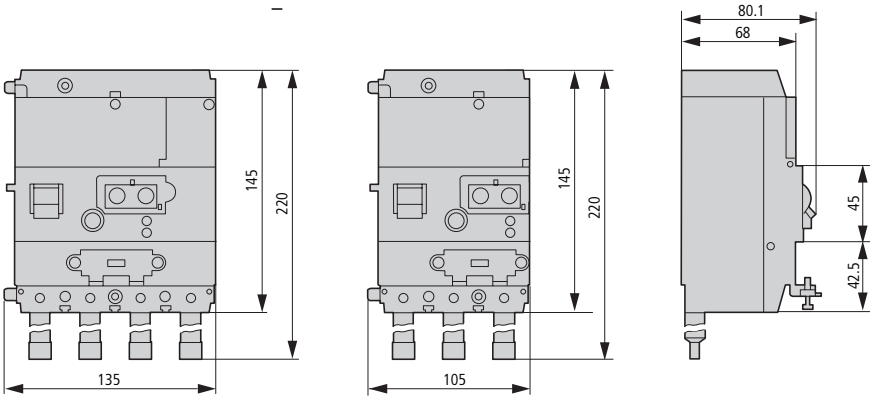

NZM1(-4)-XFI...U

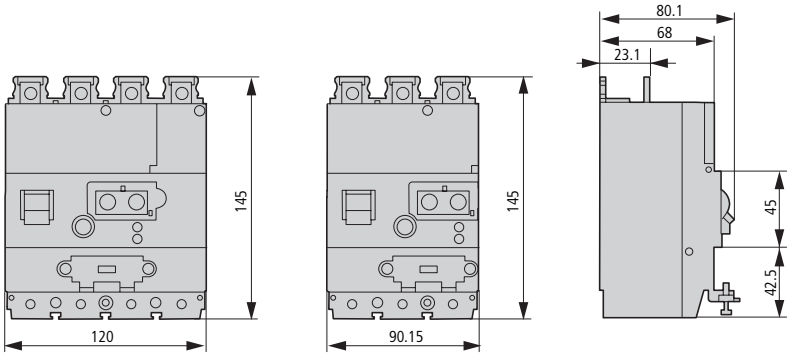

Circuit-breaker
Switch-disconnector
3 pole
NZMB2
NZMC2
NZMN2
NZMH2
PN2
N2
NS2

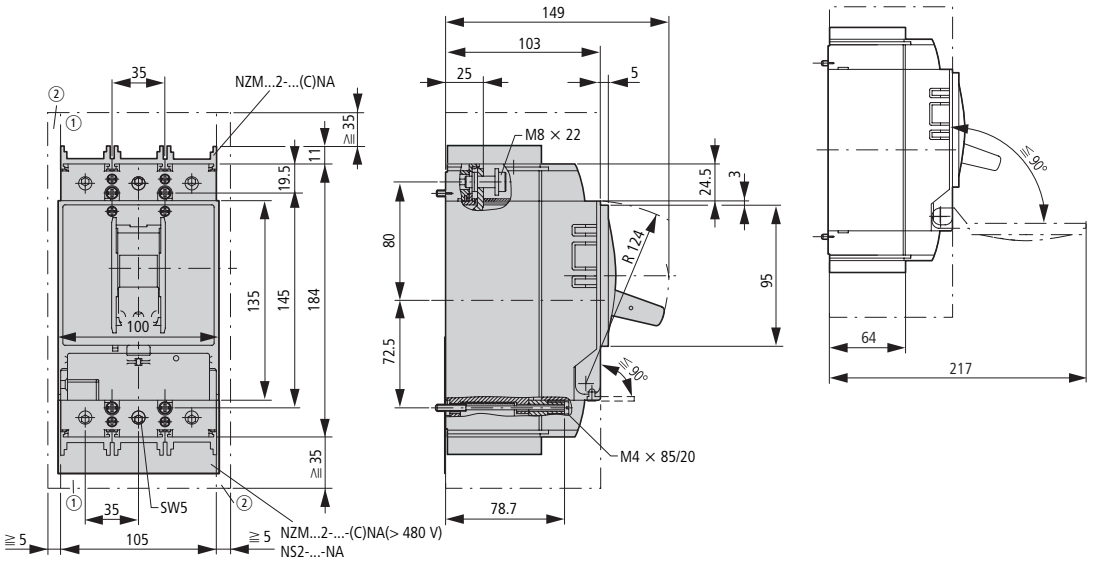

① Blow out area, minimum distance to other parts ≧ 35 mm
② Minimum distance to adjacent parts ≧ 5 mm

Circuit-breaker
Switch-disconnector
4 pole
NZMB2-4
NZMN2-4
NZMH2-4
PN2-4
N2-4

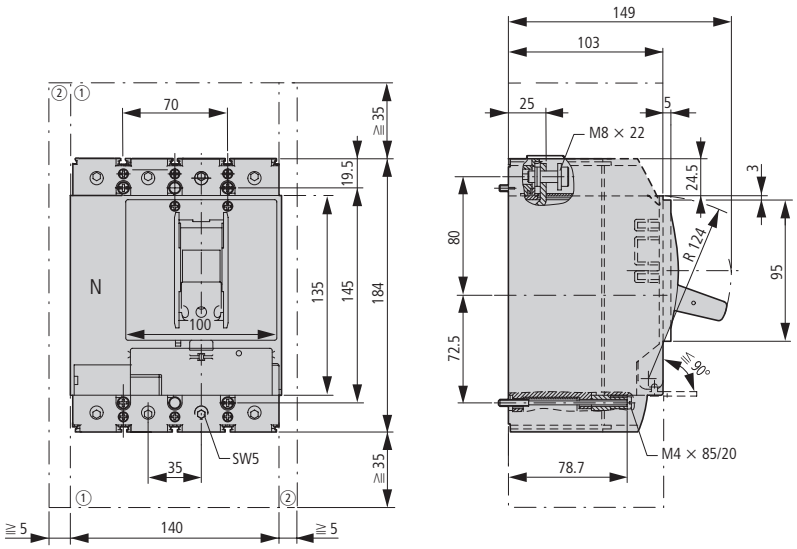

① Blow out area, minimum distance to other parts ≧ 35 mm
② Minimum distance to adjacent parts ≧ 5 mm

Box terminal

(+)NZM2(-4)-...-XKC(O)(U)

IP2X protection against contact with a finger

NZM2(-4)-XIPK

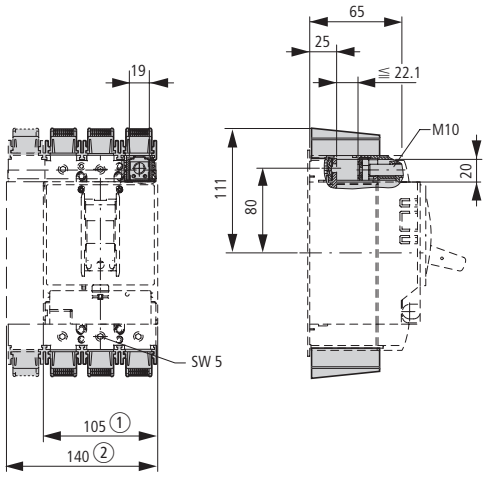

Tunnel terminal

NZM2(-4)-XKA

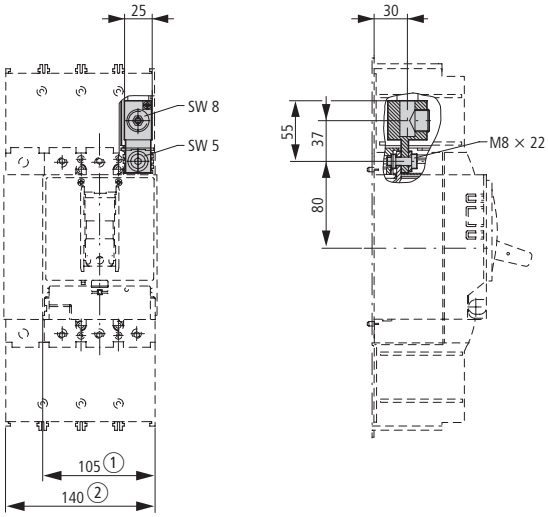

① 3 pole
② 4 pole

Covers

NZM2(-4)-XKSA

Cable lug

NZM2-XKS185

IP2X protection against contact with a finger for shroud

NZM2(-4)-XIPA

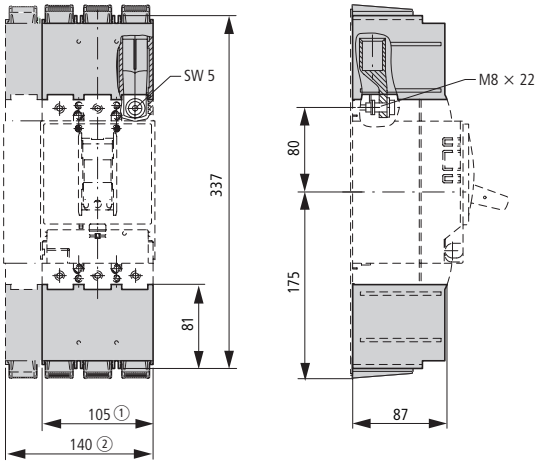

Control circuit terminal

NZM2-XSTS

NZM-XSTK

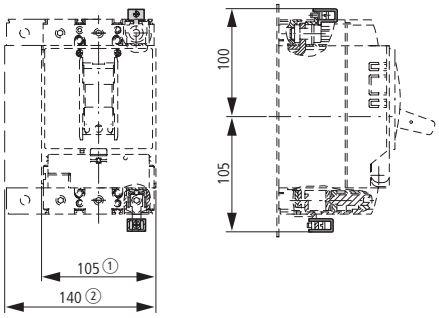

① 3 pole
② 4 pole

Connection on rear

(+)NZM2(-4)-XKR(O)(U)

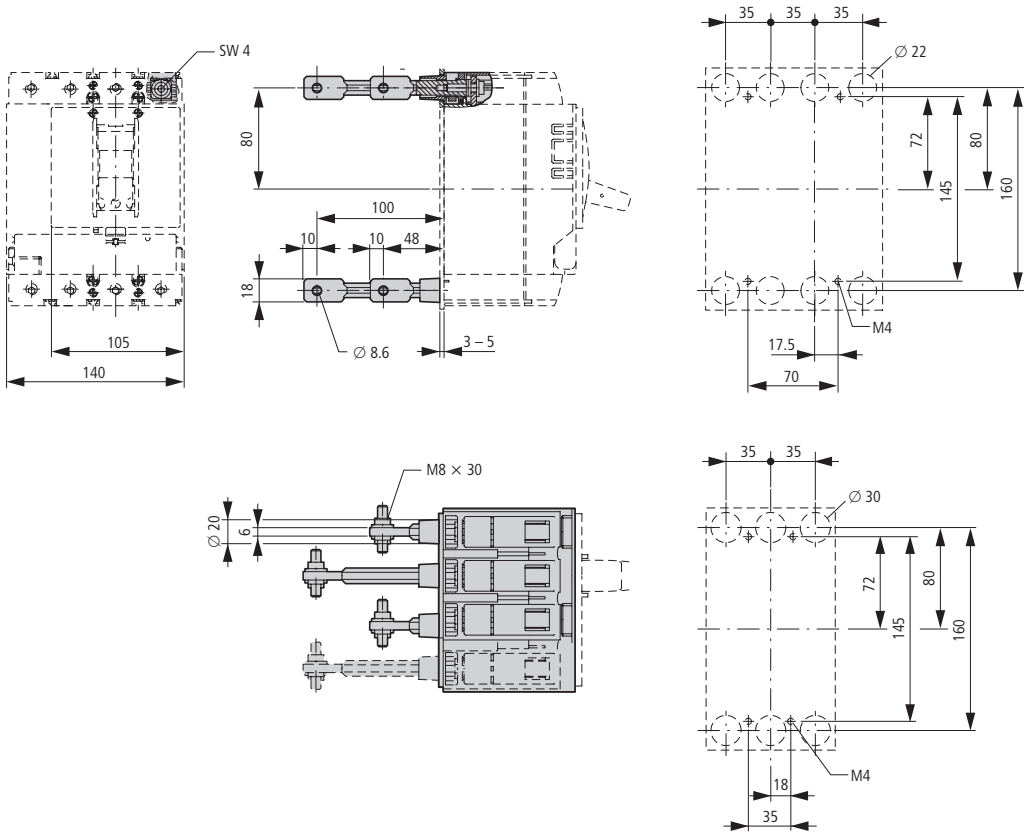

Rotary drive

Rotary handle on circuit-breaker

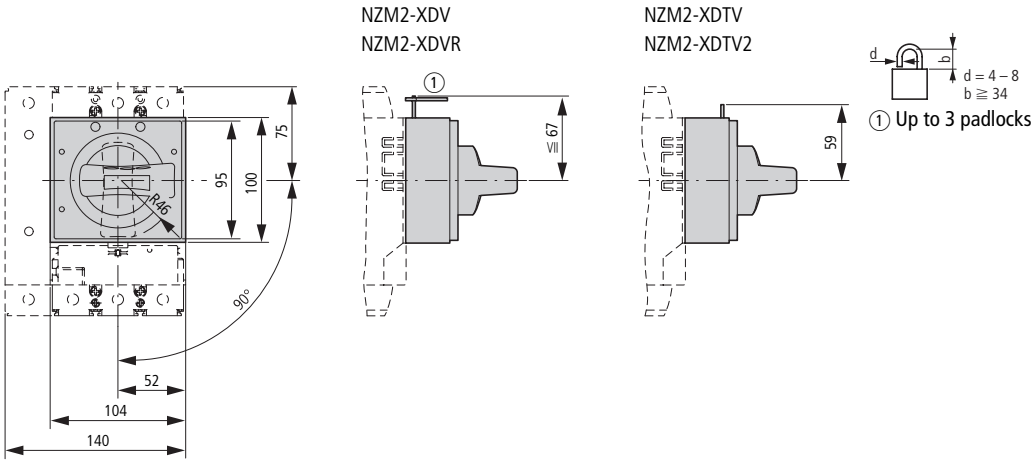

Door coupling rotary handle

NZM2-XTVD(V)(R)...

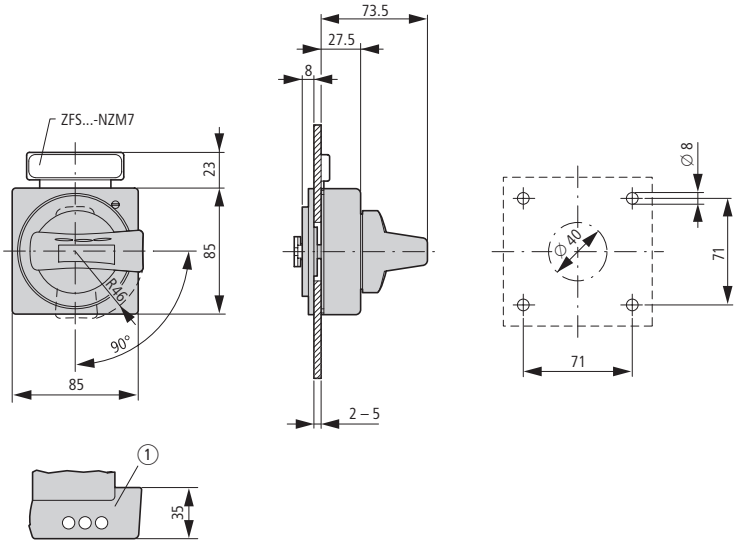

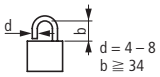

1 Up to 3 padlocks

Door coupling rotary handle with extension shaft

NZM2-XTVD(V)(R)(-NA)
NZM1/2-XV4(6)

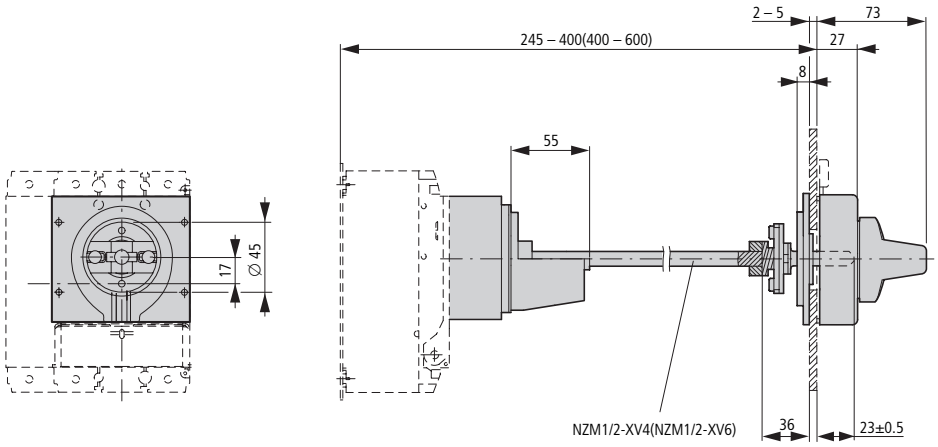

Door coupling rotary handle with extension shaft

NZM2-XTVD(V)(R)-60(-NA)

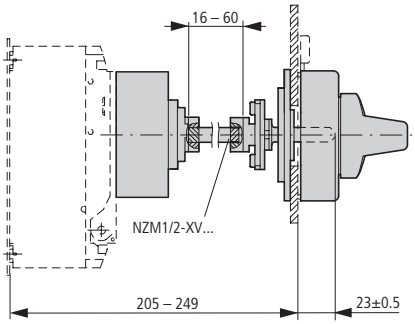

NZM2-XTVD(V)(R)-0(-NA)

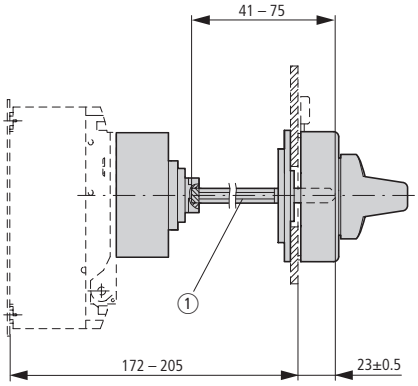

1 Special tip

Minimum door coupling rotary handle clearance from door pivot point

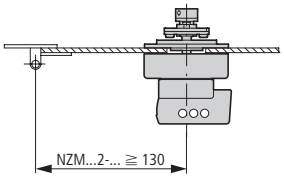

Main switch assembly kit for side panel mounting

NZM2-XS(R)-L

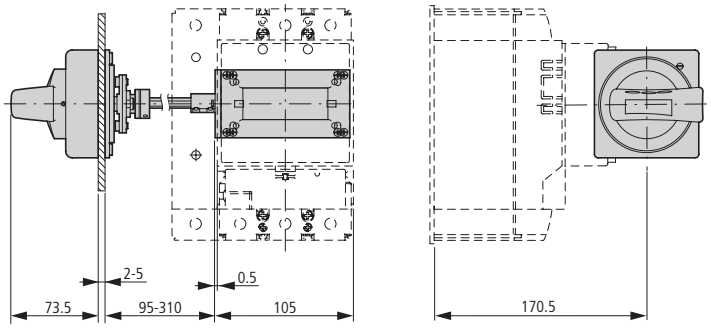

NZM2-XS(R)-R

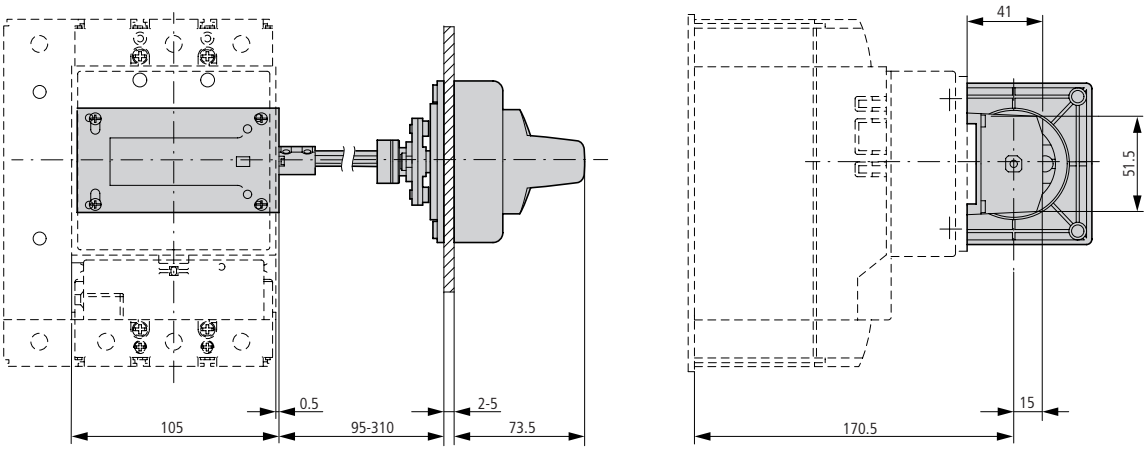

Main switch assembly kit for side panel mounting with mounting bracket

NZM2-XS(R)M-L

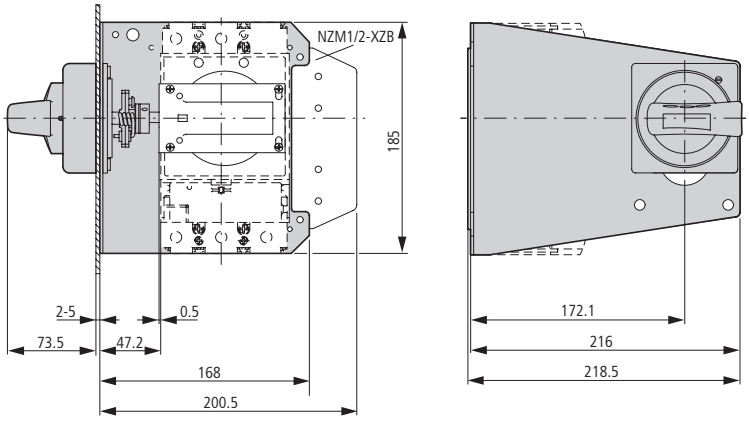

NZM2-XS(R)M-R

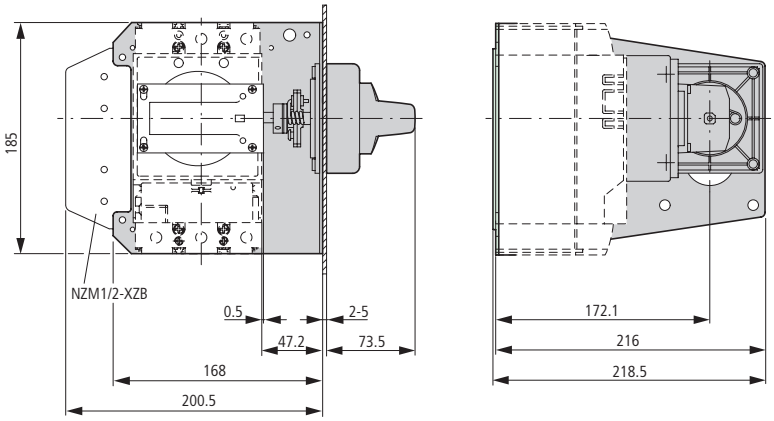

Rear drive

NZM2

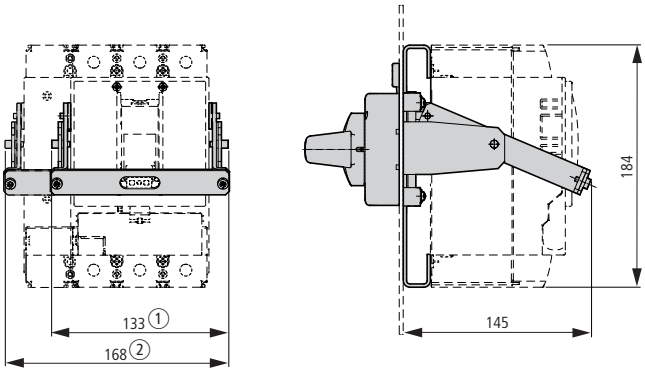

① NZM2-XRAV(R)
② NZM2-4-XRAV(R)

Spacers
NZM1/2-XAB

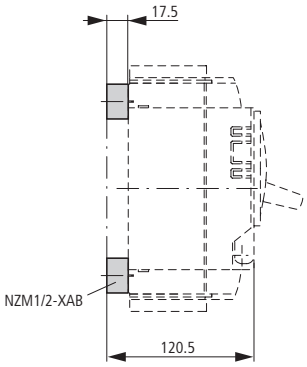

Clip plate
NZM2-XC75

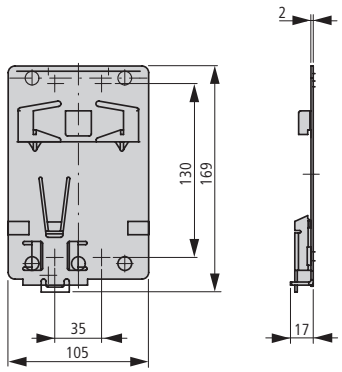

Insulating surrounds
NZM2-XBR

① Mounting aperture

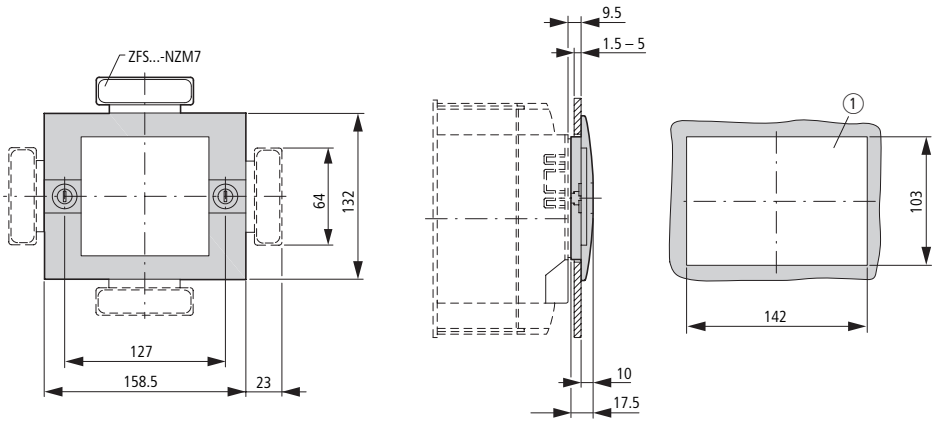

Rotary handle on switch with door interlock
NZM2-XDTV(R)

① Mounting aperture

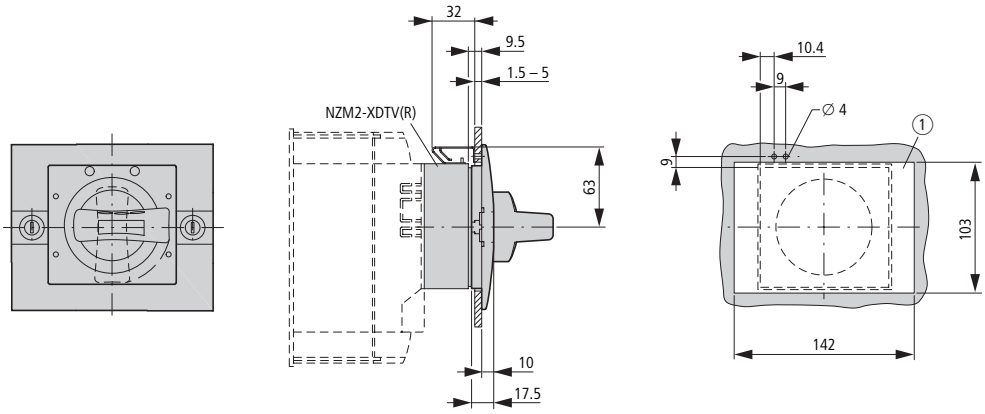

Toggle lever locking device

NZM2/3-XKAV

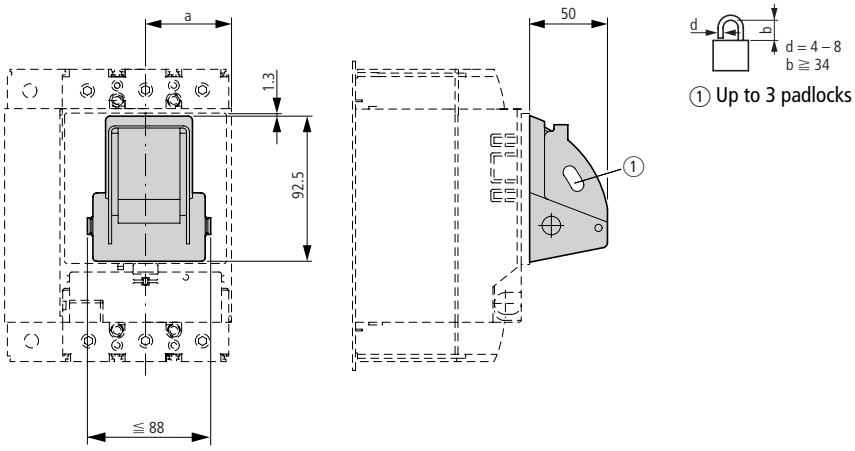

Part no.	a
NZM2, PN2, N2	52.5
NZM3, PN3, N3	70

Side-mounted handle

NZM2...

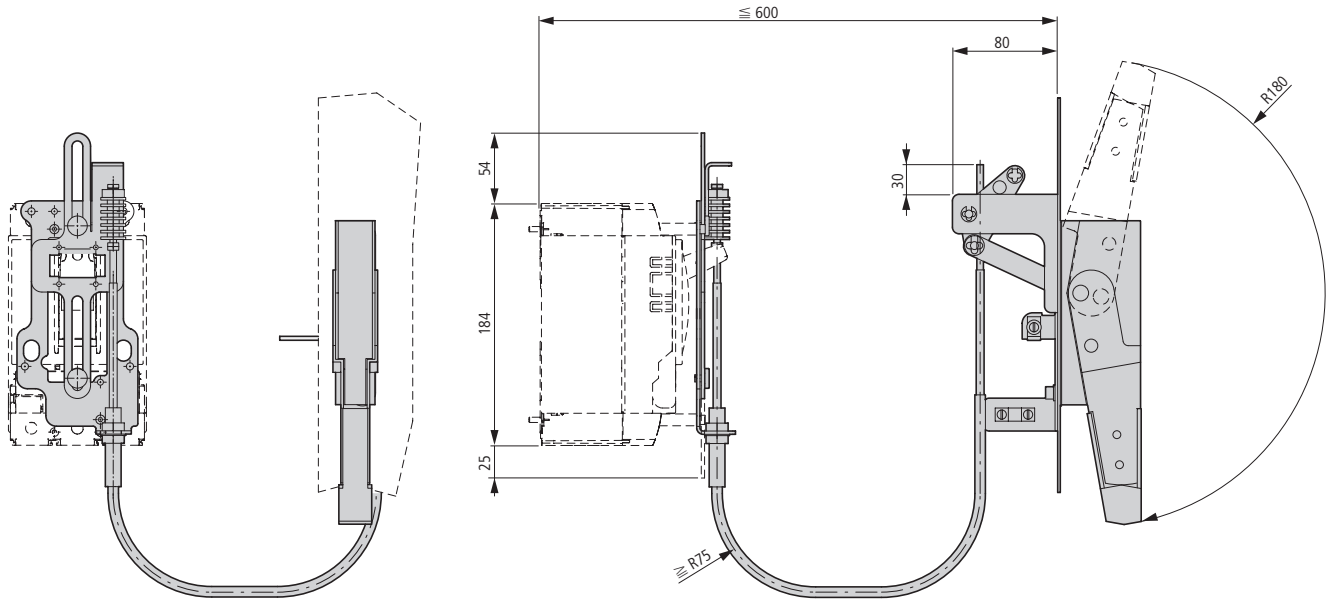

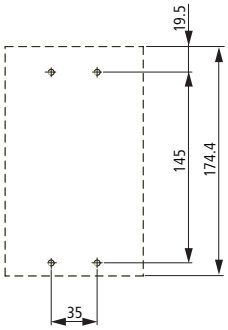

Drilling template

Mechanical interlock

NZM2-XMV + NZM2-XD

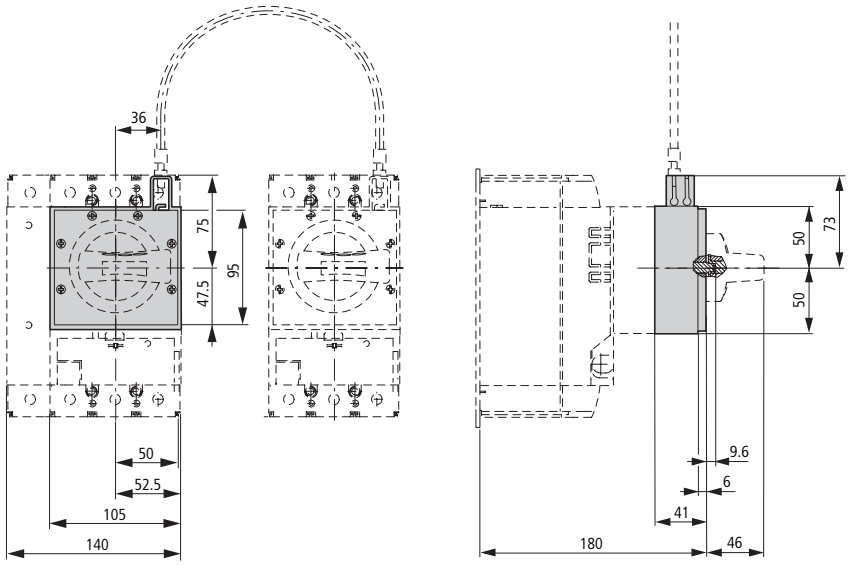

NZM2-XMV + NZM2-XTVD(V)(R)

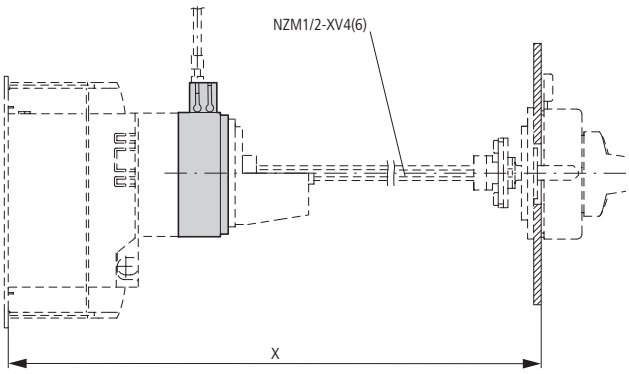

Mechanical interlock

NZM2-XMV + NZM2-XTVD(V)(R)-60

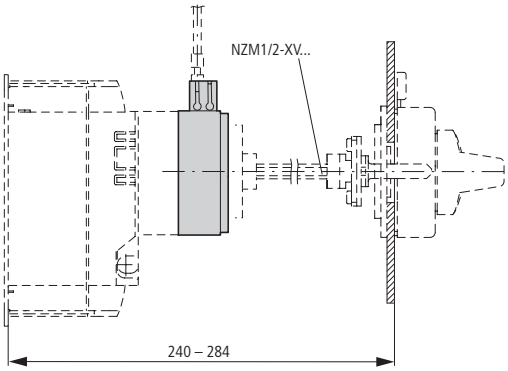

NZM2-XMV + NZM2-XT(V)D(V)(R)-0

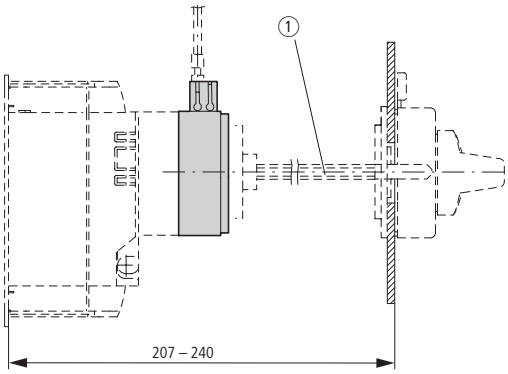

1 Special tip

Paralleling mechanism

PN2-XPA

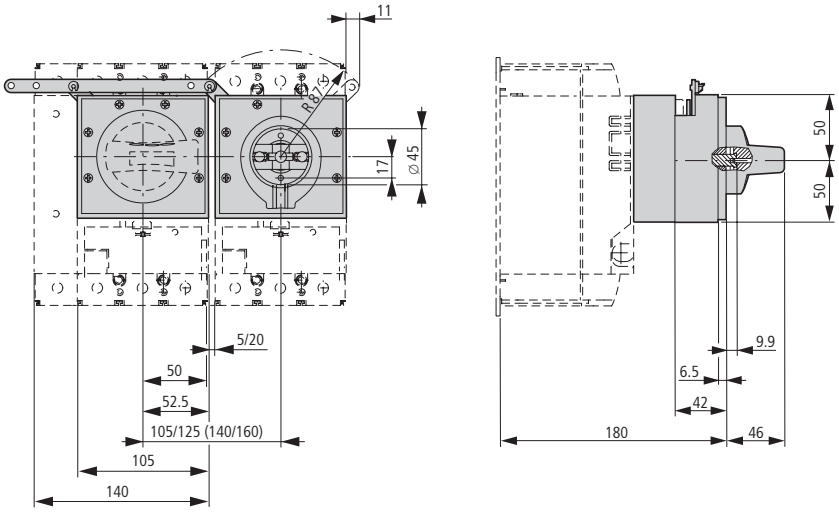

PN2-XPA

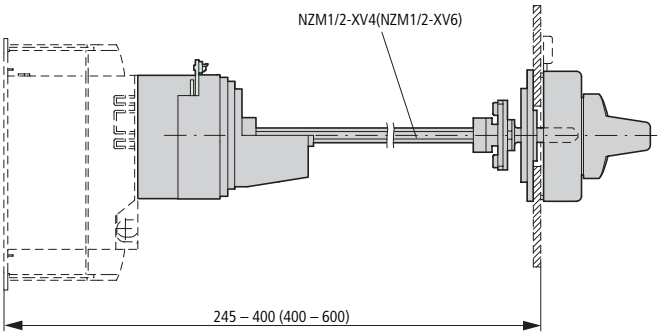

Remote operator

NZM2-XR...

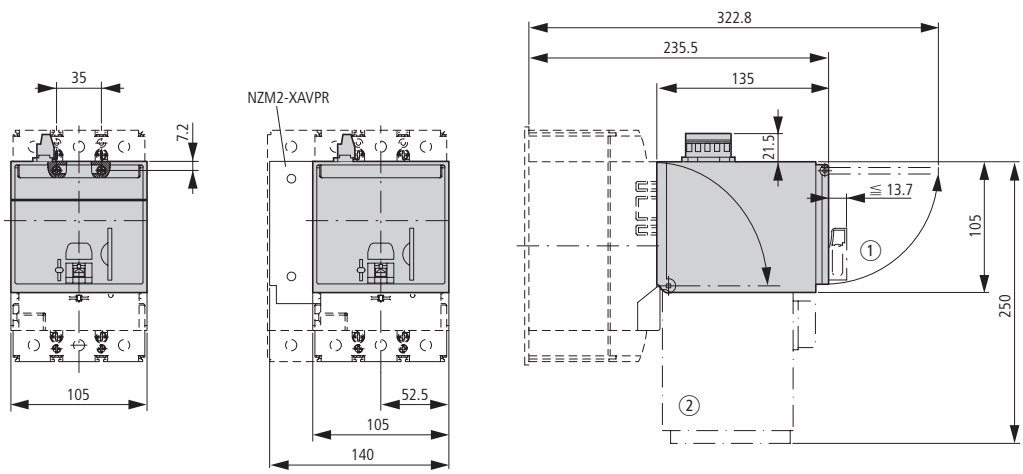

① Up to 3 padlocks
② Remote operator hinged

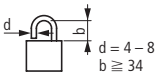

Insulated enclosures

NZM2-XCI43-T...

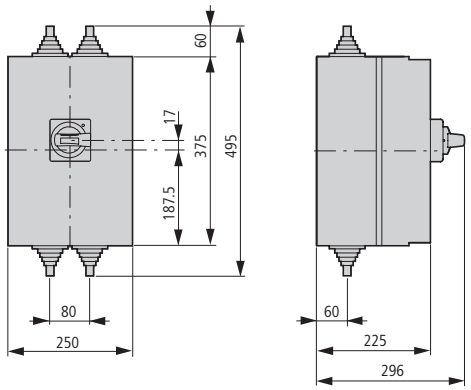

NZM2-XCI45-T...

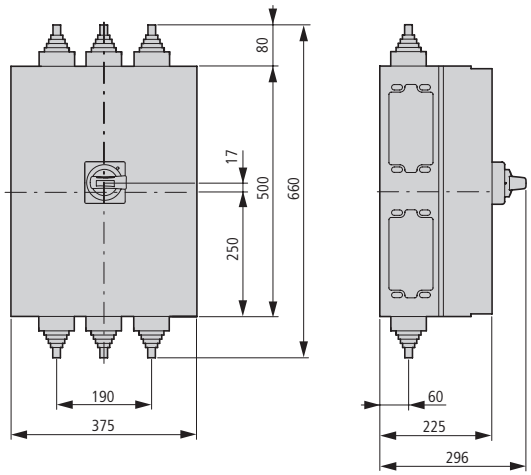

Component adapter

NZM2-XAD250

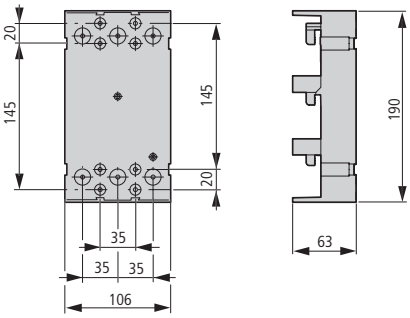

Plug-in units

+NZM2(-4)-XSV

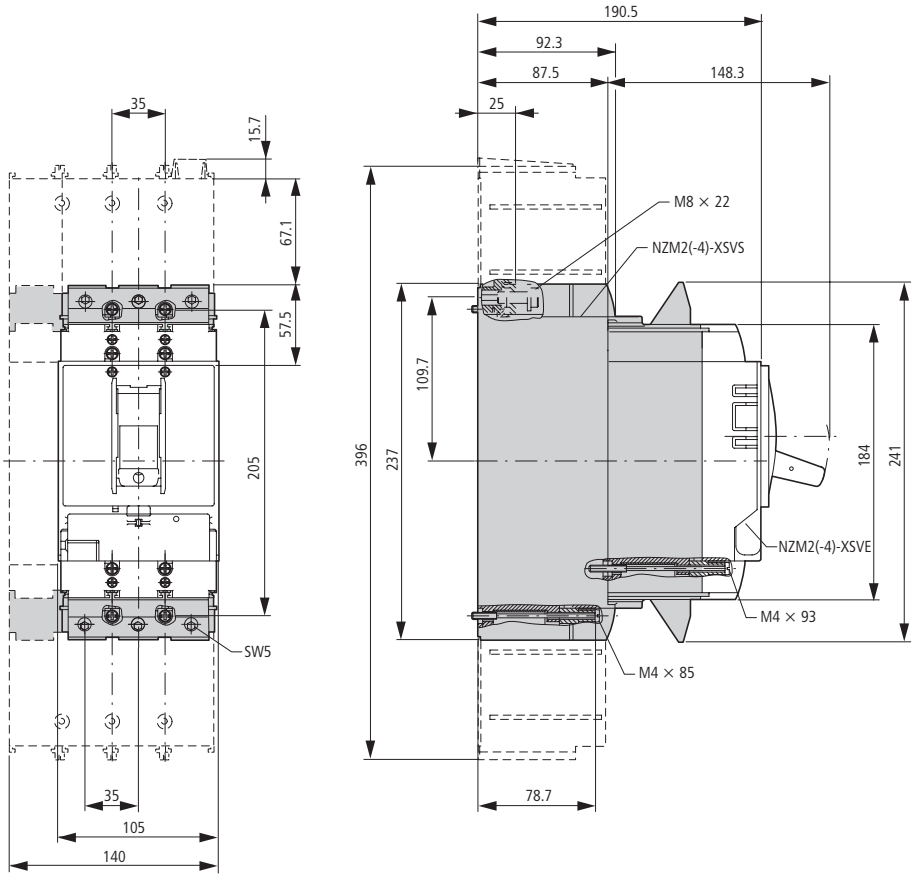

Residual-current release

NZM2(-4)-XFI...

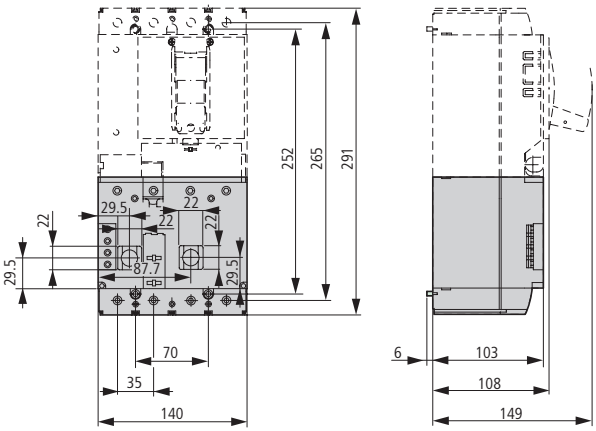

Data Management Interface (DMI Module)

NZM-XDMI612

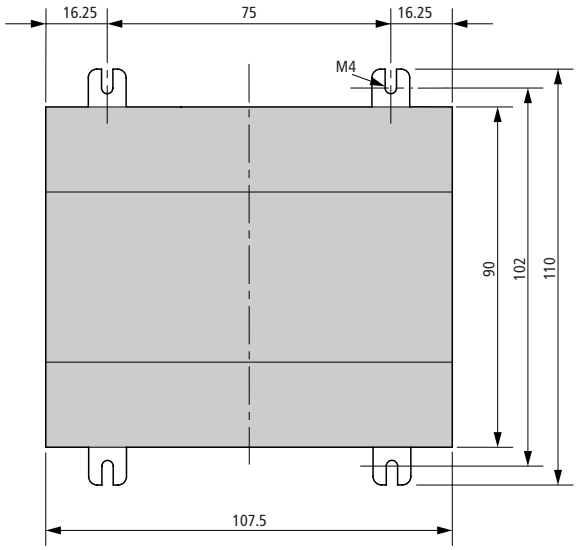

NZM-XDMI-DPV1
EASY2...

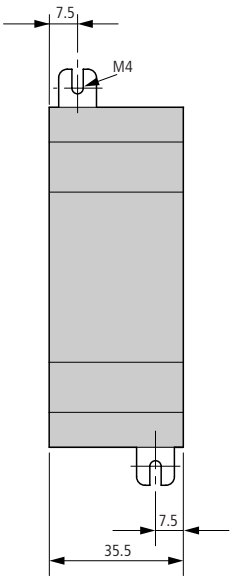

NZM-XDMI...
EASY2...

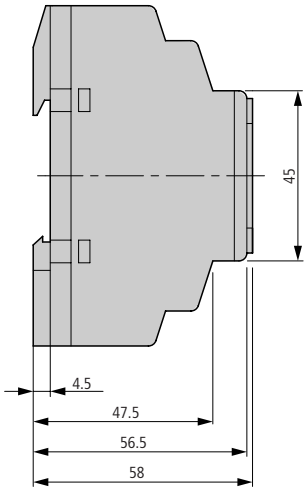

Undervoltage releases, off-delayed

UVU-NZM

Capacitor unit

NZM-XCM

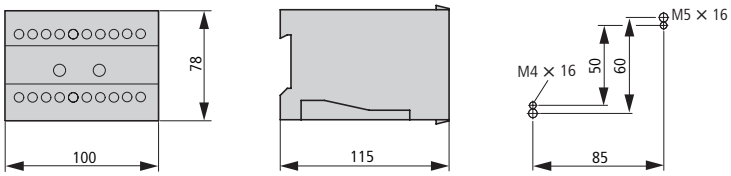

Circuit-breaker
Switch-disconnector
3 pole
NZMN3
NZMH3
PN3
N3
NS3

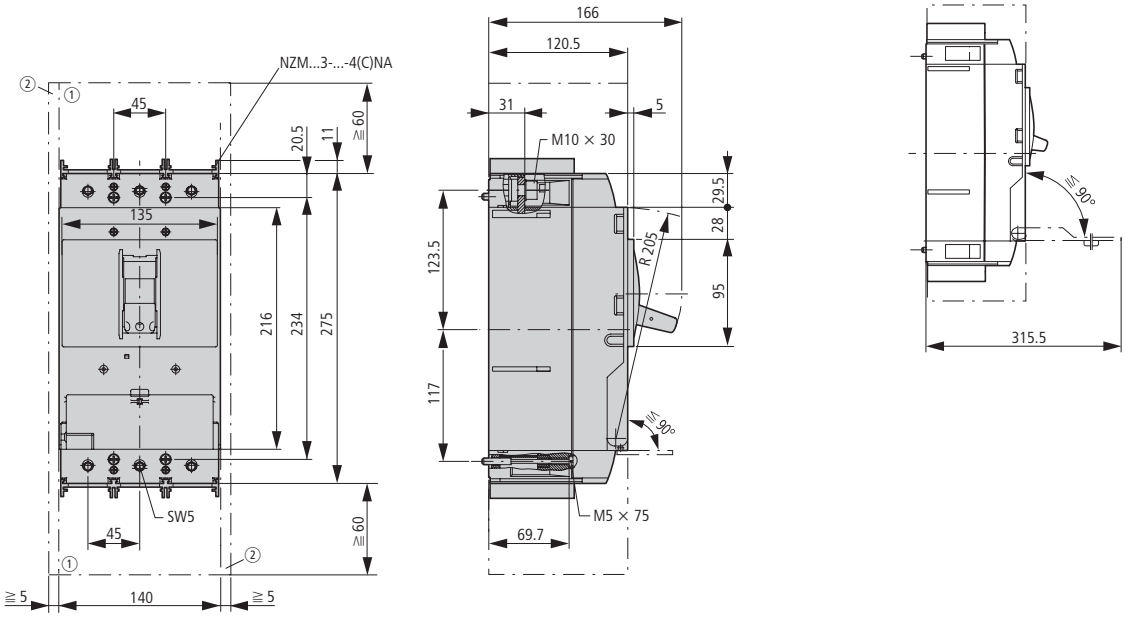

① Blow-out space, minimum distance to other parts ≧ 60 mm
② Minimum distance to adjacent parts ≧ 5 mm

Circuit-breaker
Switch-disconnector
4 pole
NZMN3-4
NZMH3-4
PN3-4
N3-4

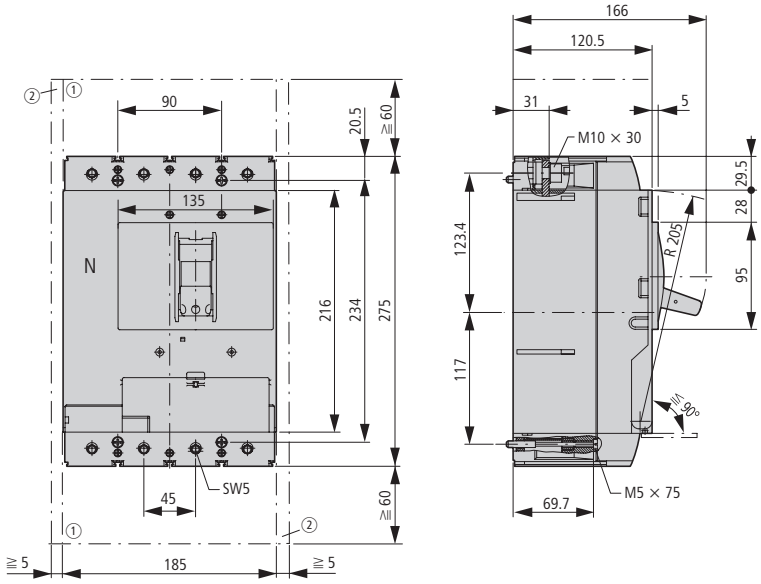

① Blow-out space, minimum distance to other parts ≧ 60 mm
② Minimum distance to adjacent parts ≧ 5 mm

Box terminal

(+)NZM3(-4)-XKC(O)(U)

IP2X protection against contact with a finger

NZM3(-4)-XIPK

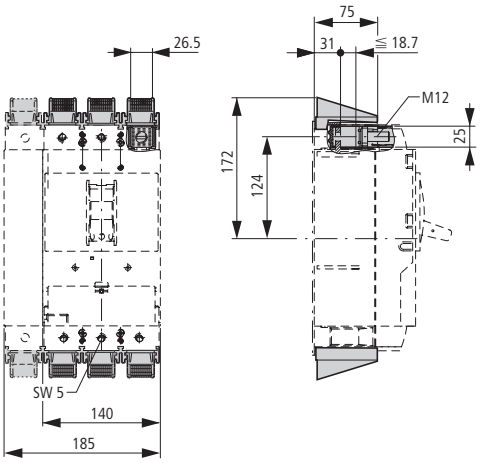

Tunnel terminal

NZM3(-4)-XKA1(2)

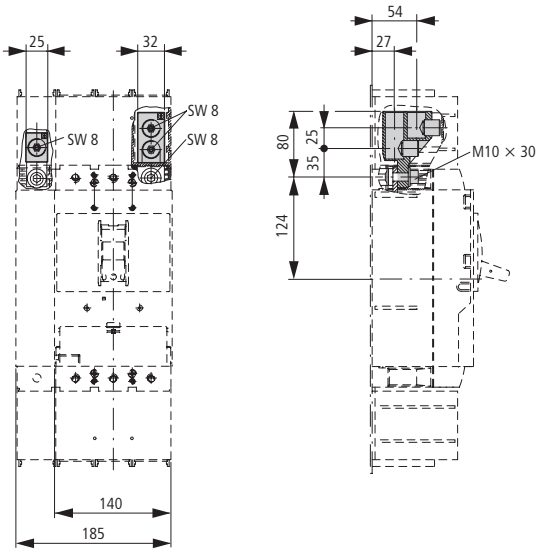

Covers

NZM3(-4)-XKSA

Cable lug

NZM3-XKS185

IP2X protection against contact with a finger

NZM3(-4)-XIPA

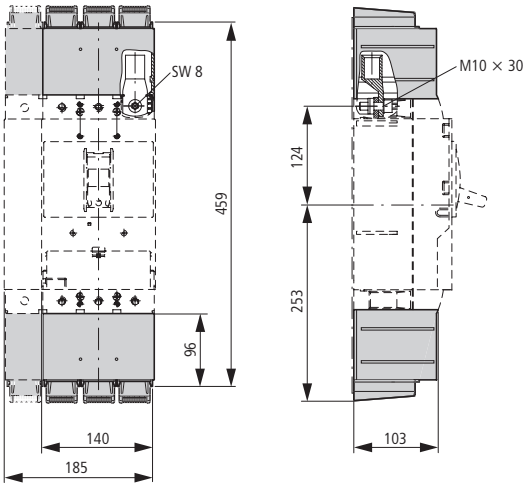

Control circuit terminal

NZM3/4-XSTS

NZM-XSTK

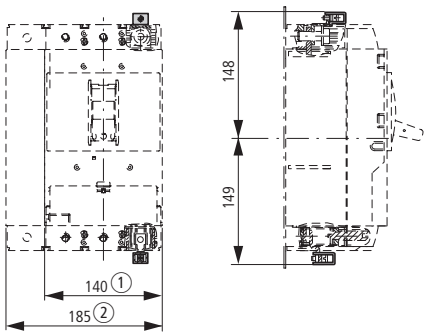

① 3 pole
② 4 pole

Connection width extension
NZM3(-4)-XKV70
Terminals
NZM3(-4)-XK22X21
NZM3(-4)-XK300

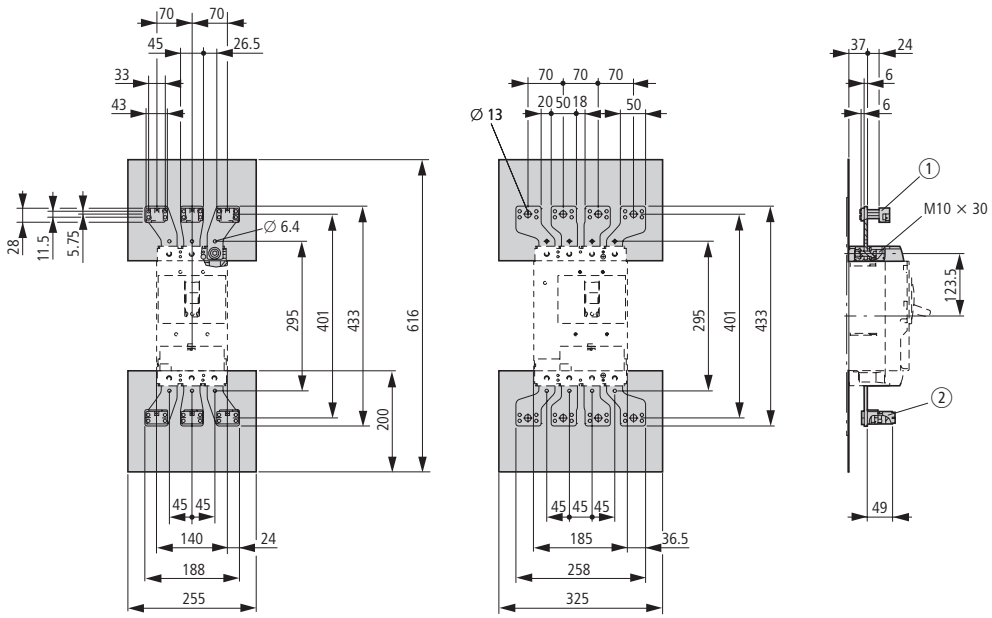

① NZM3(-4)-XK22X21
② NZM3(-4)-XK300

Connection on rear
(+)NZM3(-4)-XKR(O)(U)

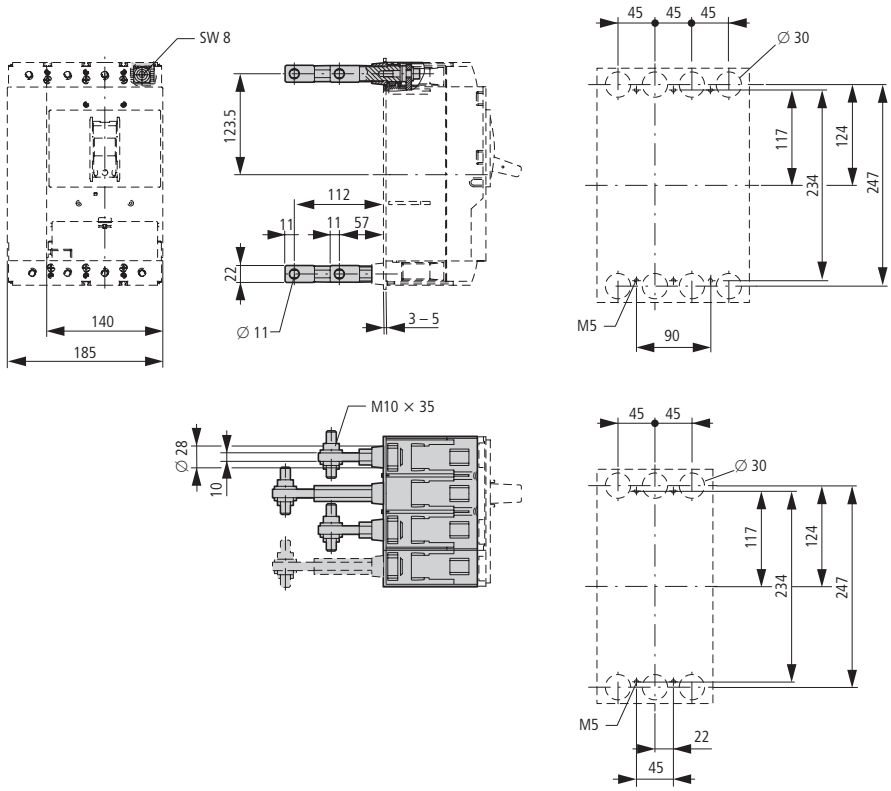

Phase isolators

NZM3-4-XKP

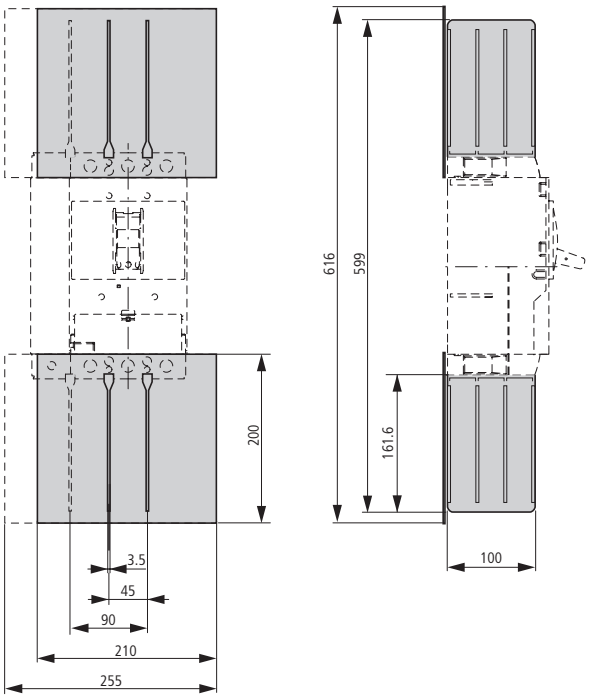

Spacers

NZM3-XAB

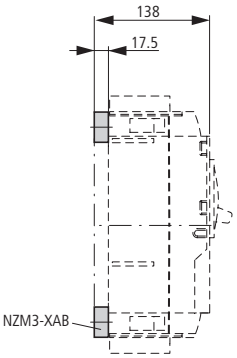

Insulating surrounds

NZM3-XBR

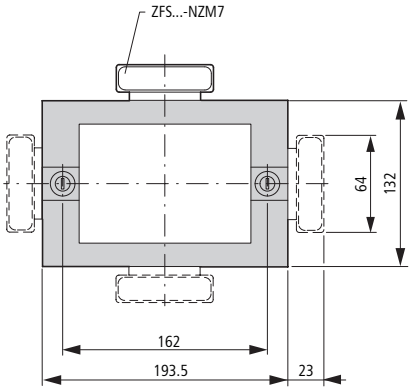

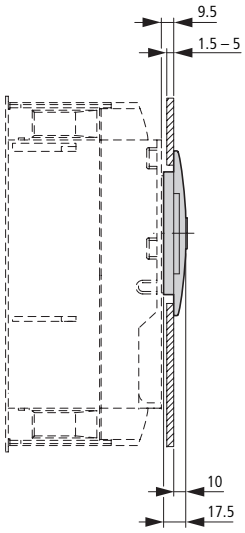

① Mounting aperture

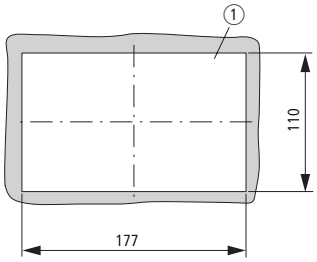

Rotary drive

Rotary handle on circuit-breaker

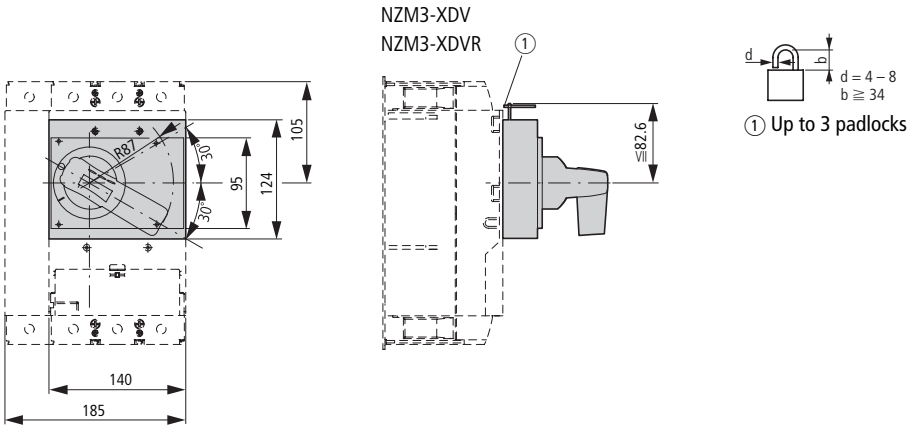

Door coupling rotary handle

NZM3-XTVD(V)(R)...

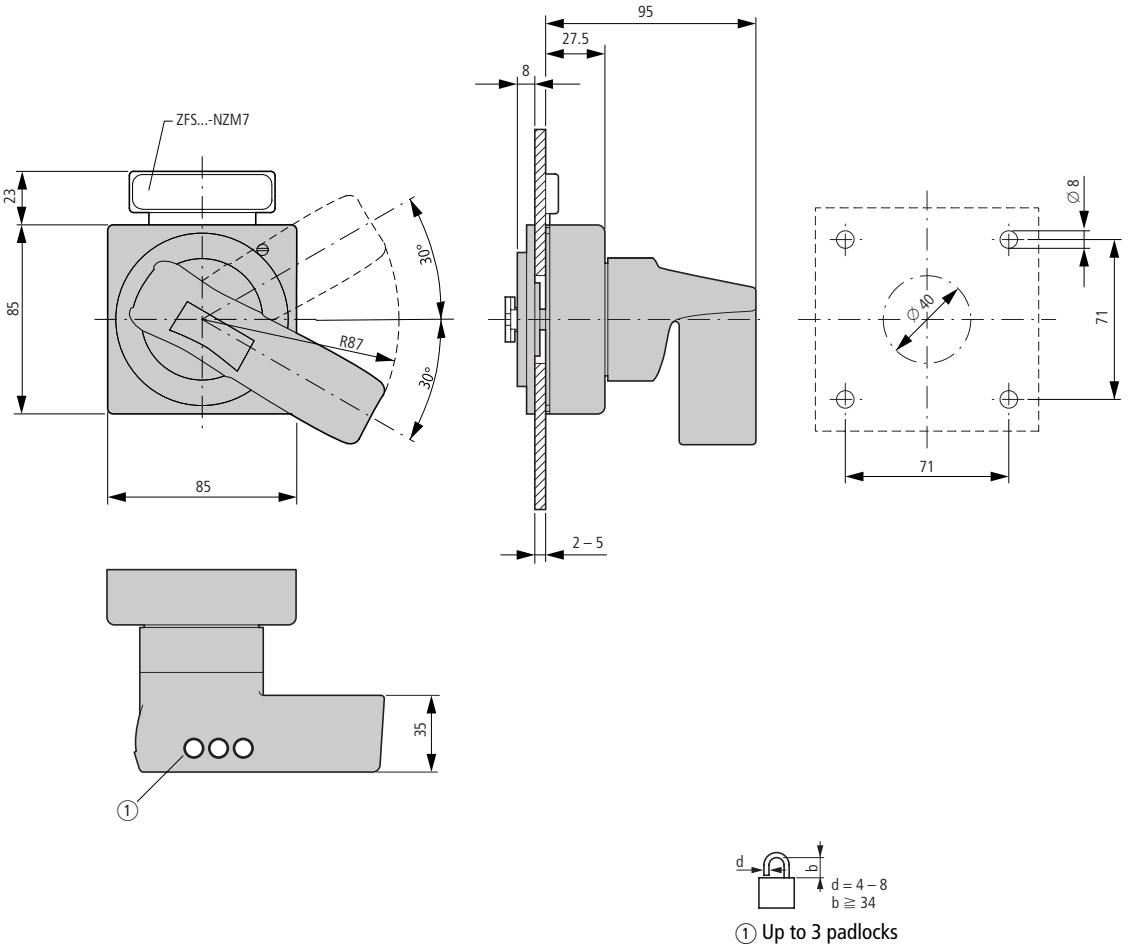

Door coupling rotary handle with extension shaft

NZM3-XTVD(V)(R)(-NA)
NZM3/4-XV4(6)

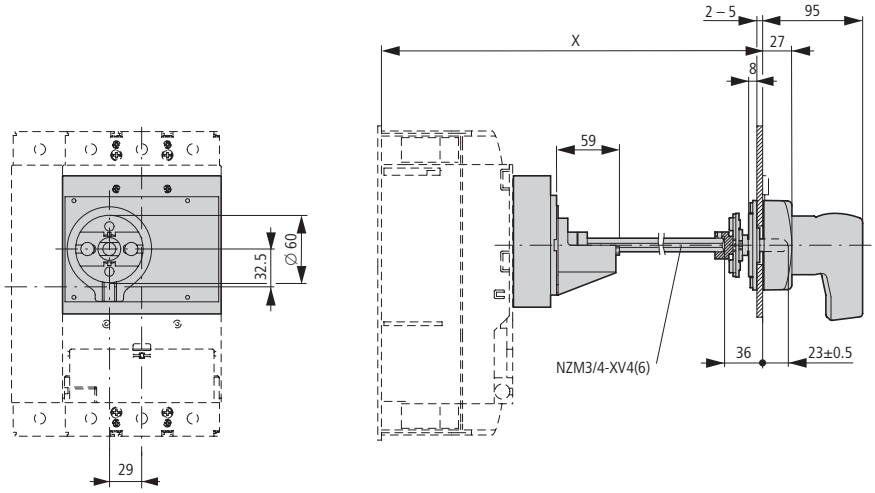

Part no.	x
NZM3/4-XV4	270 – 400
NZM3/4-XV6	400 – 600

NZM3-XTVD(V)(R)-60(-NA)

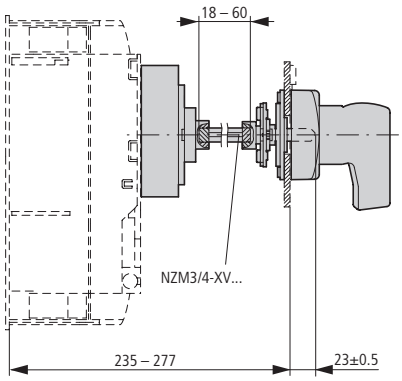

NZM3-XTVD(V)(R)-0(-NA)

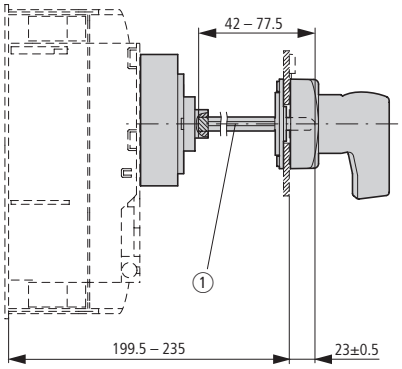

1 Special tip

Minimum door coupling rotary handle clearance from door pivot point

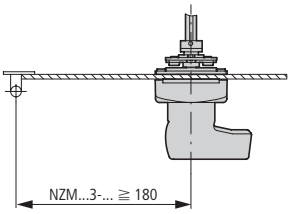

Main switch assembly kit for side panel mounting

NZM3-XS(R)-L

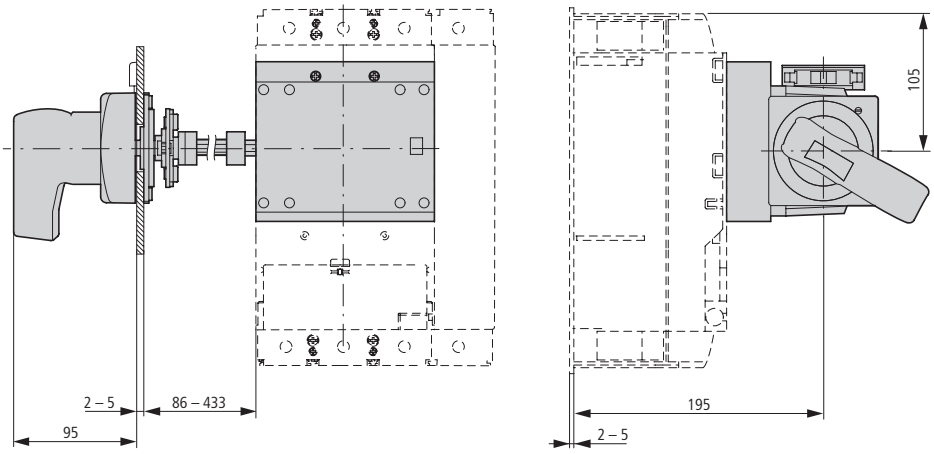

NZM3-XS(R)-R

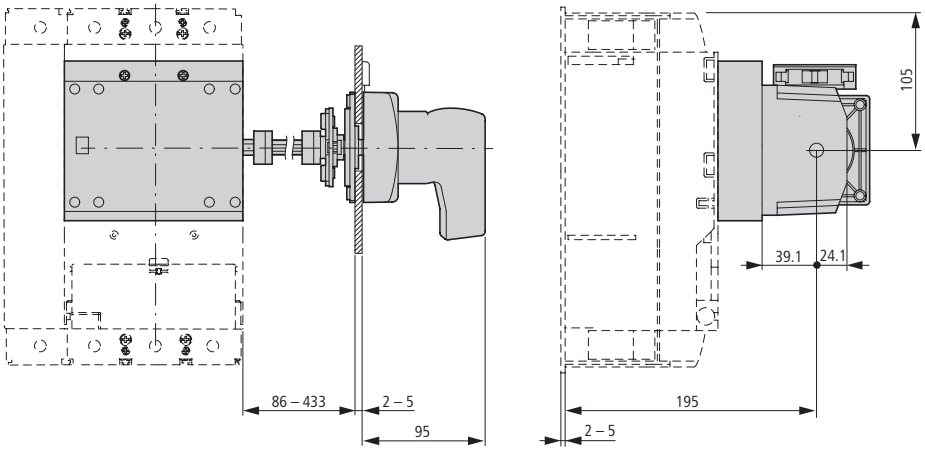

Side-mounted handle

NZM3...

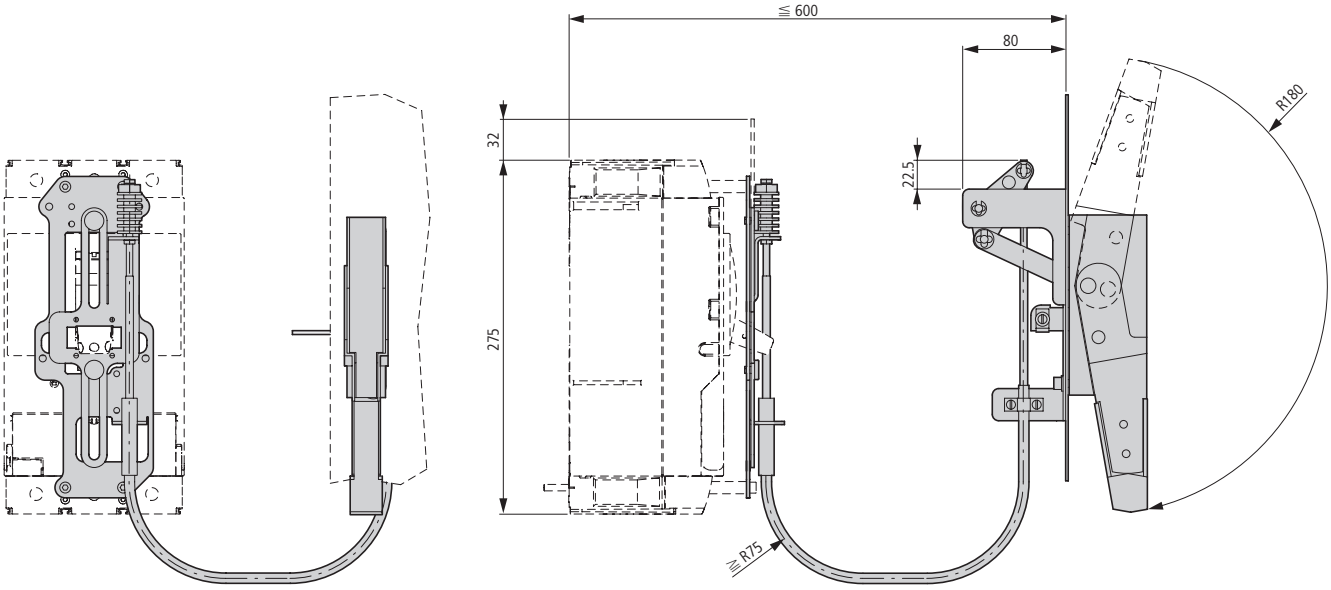

Mechanical interlock

NZM3-XMV + NZM3-XDV(R)

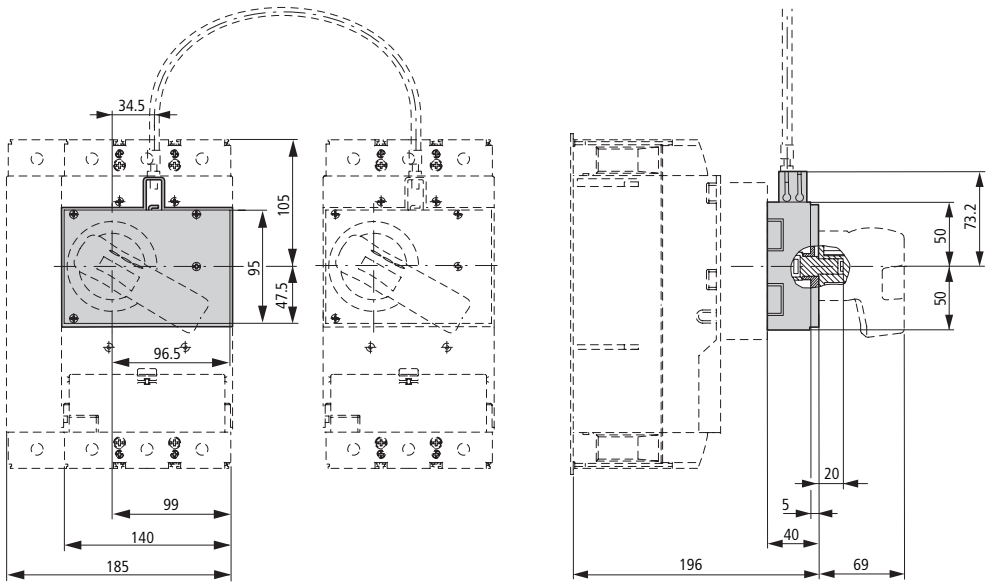

NZM3-XMV + NZM3-XTVD(V)(R)

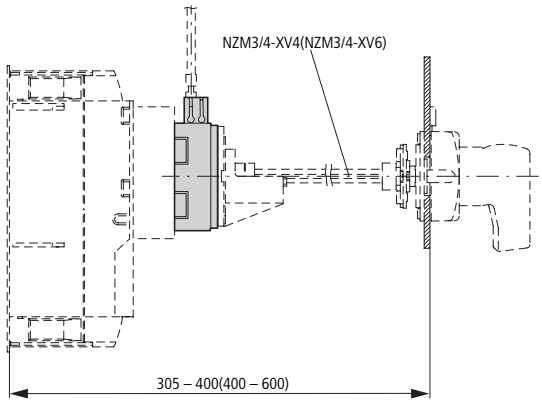

NZM3-XMV + NZM3-XTVD(V)(R)-60

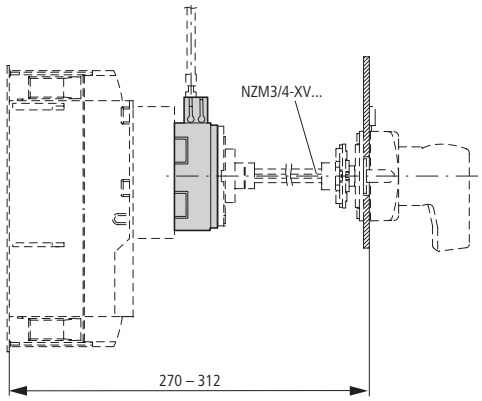

NZM3-XMV + NZM3-XTVD(V)(R)-0

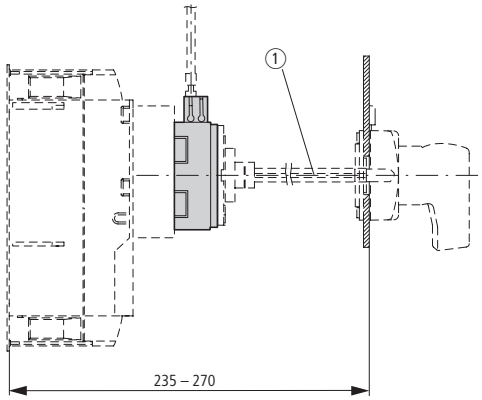

1 Special tip

Paralleling mechanism

PN3-XPA

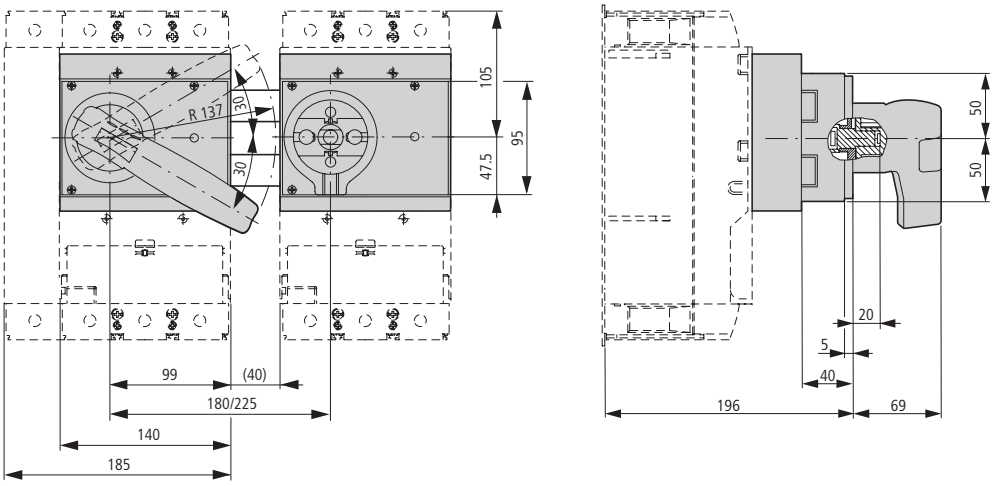

PN3-XPA

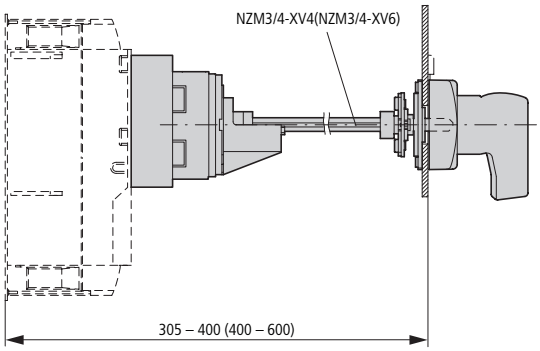

Insulated enclosures

NZM3-XCI48-TD

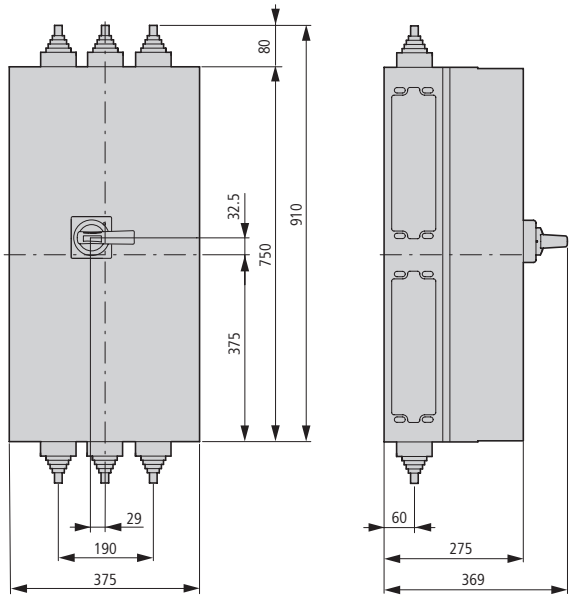

Component adapter

NZM3-XAD550

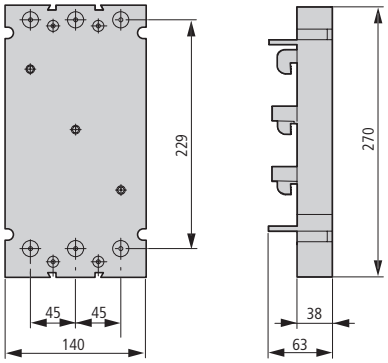

Remote operator

NZM3-XR...

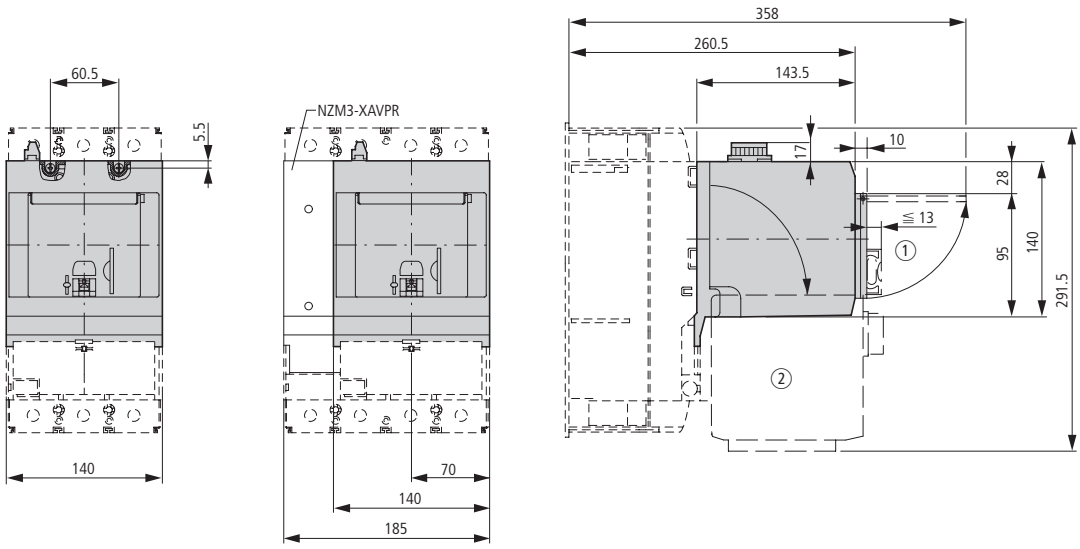

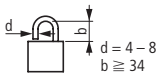

① Up to 3 padlocks

Withdrawable unit

+NZM3(-4)-XAV

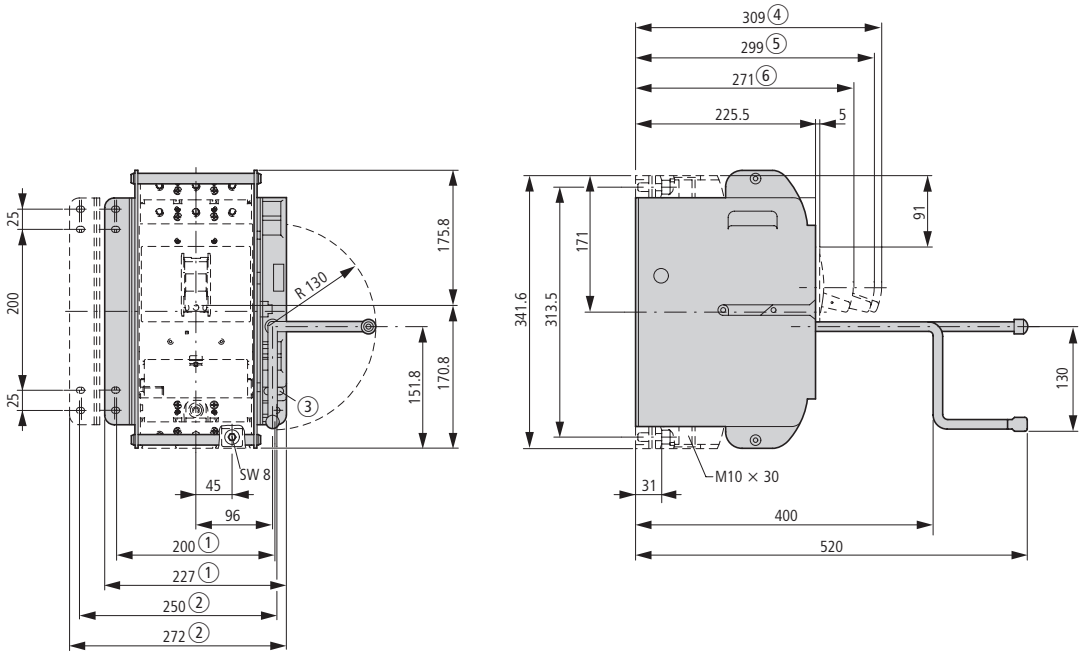

① 3-pole
② 4-pole

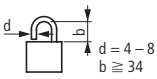

③ Up to 3 padlocks

④ withdrawn
⑤ test
⑥ connected

Circuit-breaker
Switch-disconnector
3 pole
NZMN4
NZMH4
N4
NS4

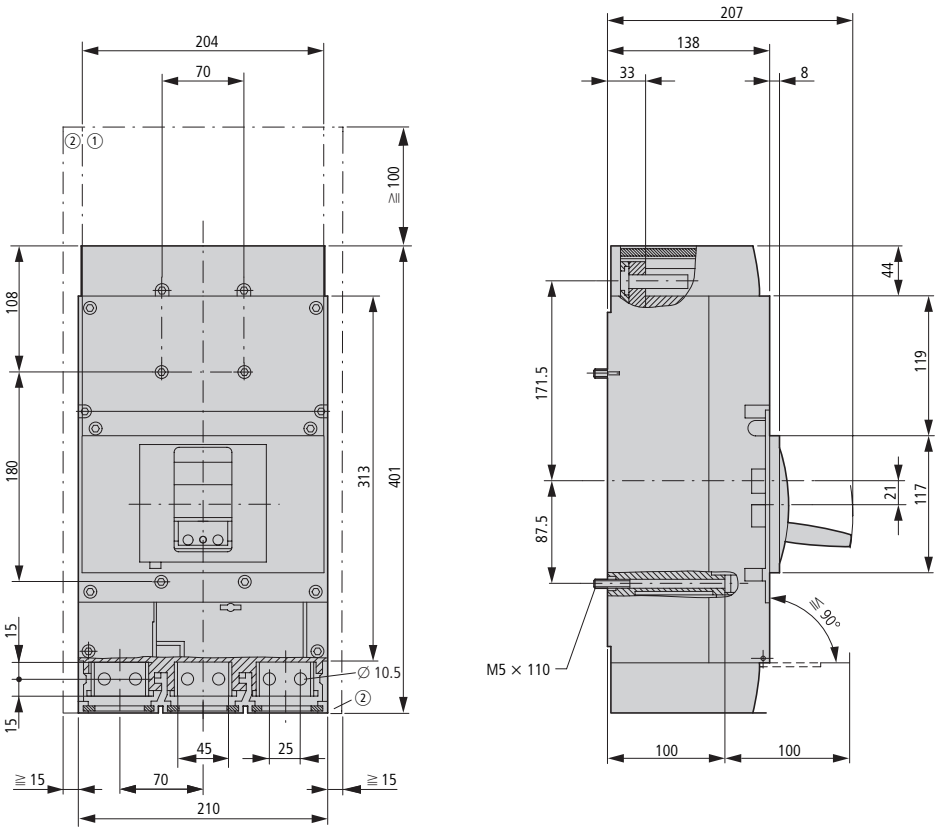

① Blow out area, minimum distance to other parts ≧ 100 mm up to 690 V; ≧ 200 mm up to 1000 V
② Minimum distance to adjacent parts ≧ 15 mm

Circuit-breaker
3 pole
NZMN4-VE2000
NZMH4-VE2000

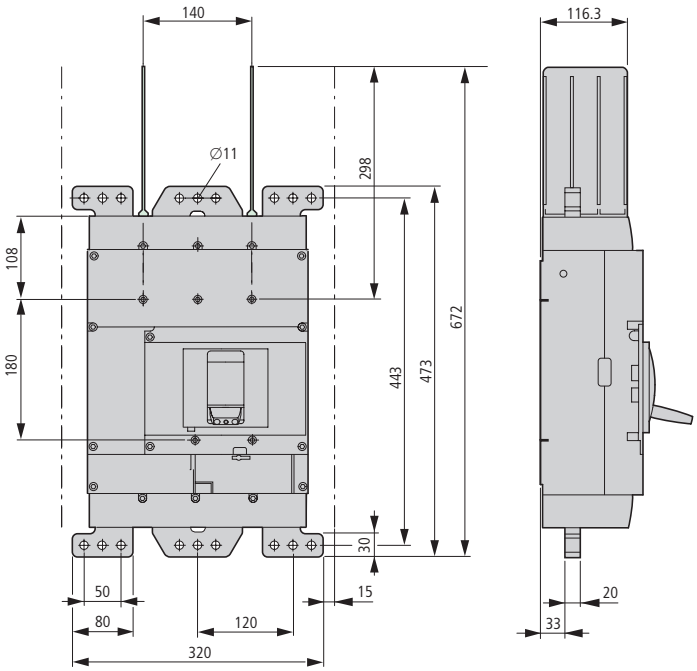

Circuit-breaker
Switch-disconnector
4 pole
NZMN4-4
NZMH4-4
N4-4

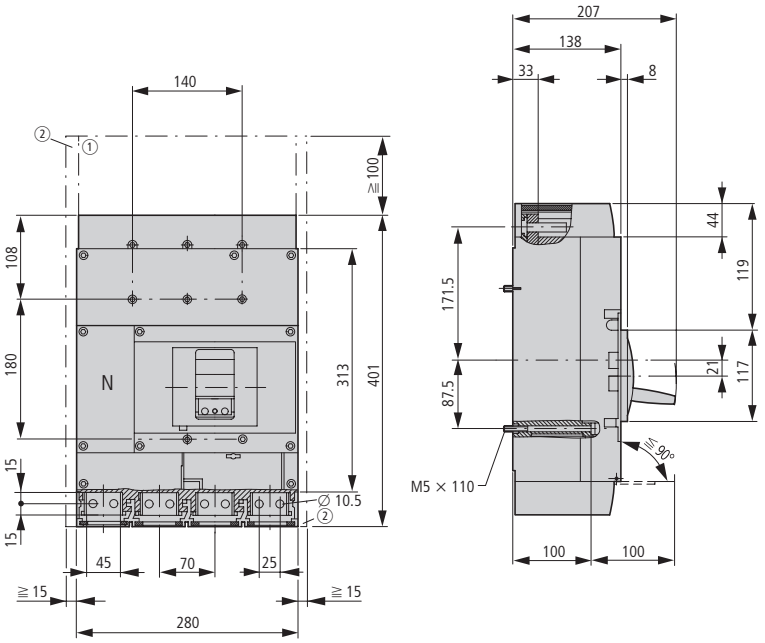

① Blow out area, minimum distance to other parts ≧ 100 mm up to 690 V; ≧ 200 mm up to 1000 V
② Minimum distance to adjacent parts ≧ 15 mm

Covers
NZM4(-4)-XKSA

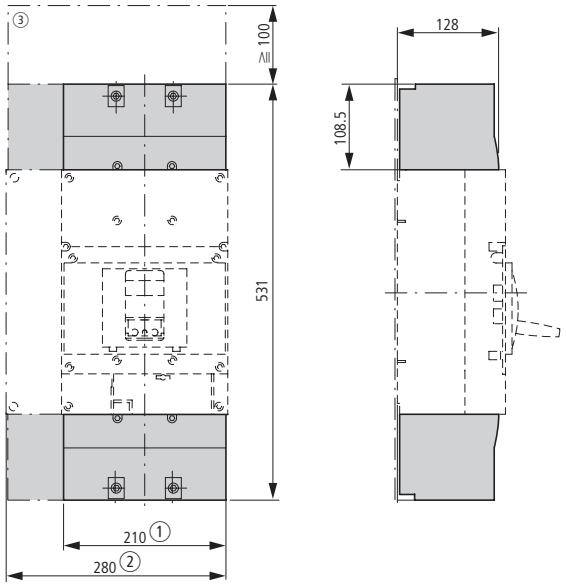

Tunnel terminal
NZM4-4-XKA

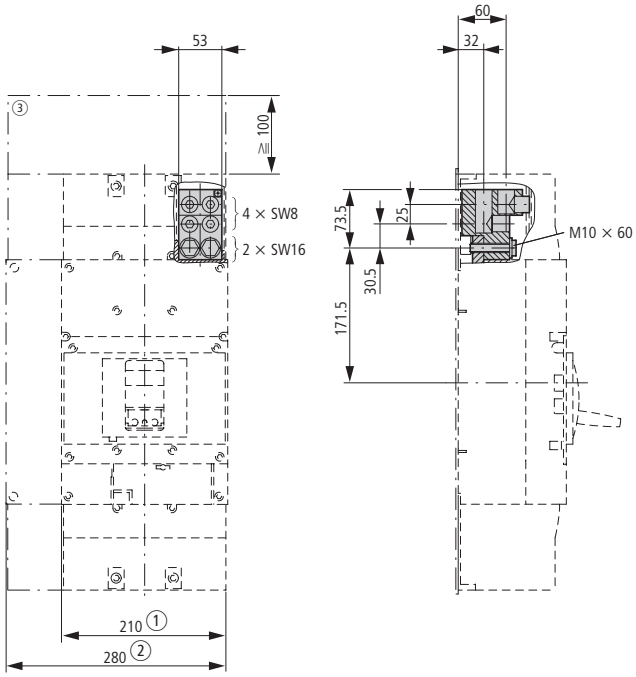

① 3 pole
② 4 pole
③ Clearance from conductive parts ≧ 100 mm up to 690 V; ≧ 200 mm up to 1000 V

Screw connection

Module plate **Flat cable terminal**

Single hole NZM4(-4)-XKB

NZM4(-4)-XKM1

2-hole

NZM4(-4)-XKM2

Part no.	a	b
NZM4(-4)-XKM1	36	47
NZM4(-4)-XKM2	32	40
NZM4(-4)-XKB	–	47

① 3 pole
② 4 pole
③ Clearance from conductive parts ≧ 100 mm up to 690 V; ≧ 200 mm up to 1000 V

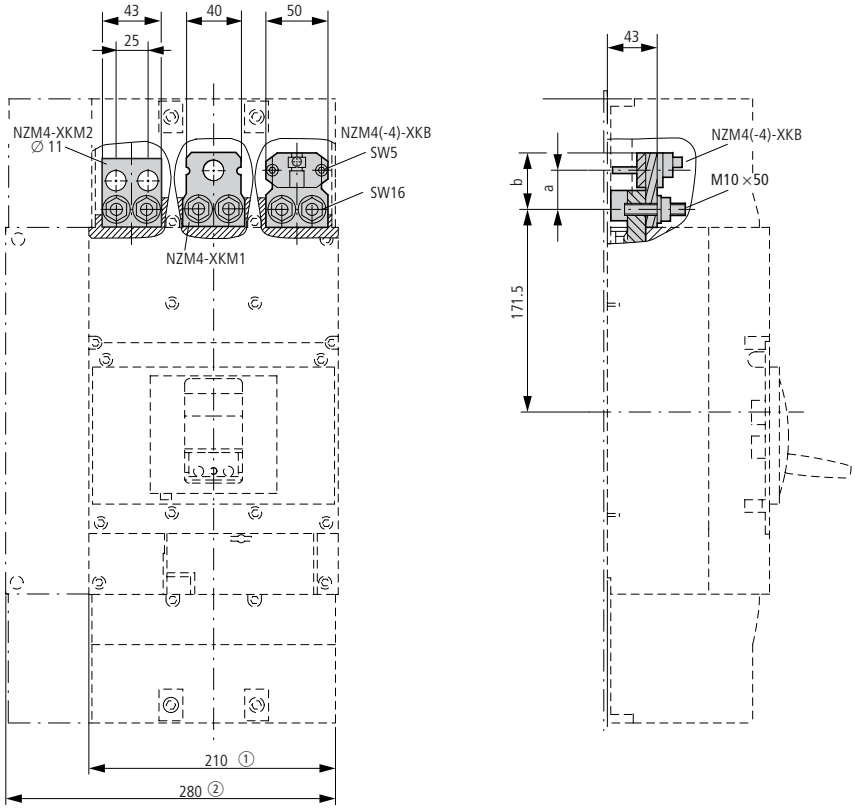

Module plate

2 holes, vertical

NZM4(-4)-XKM2S...

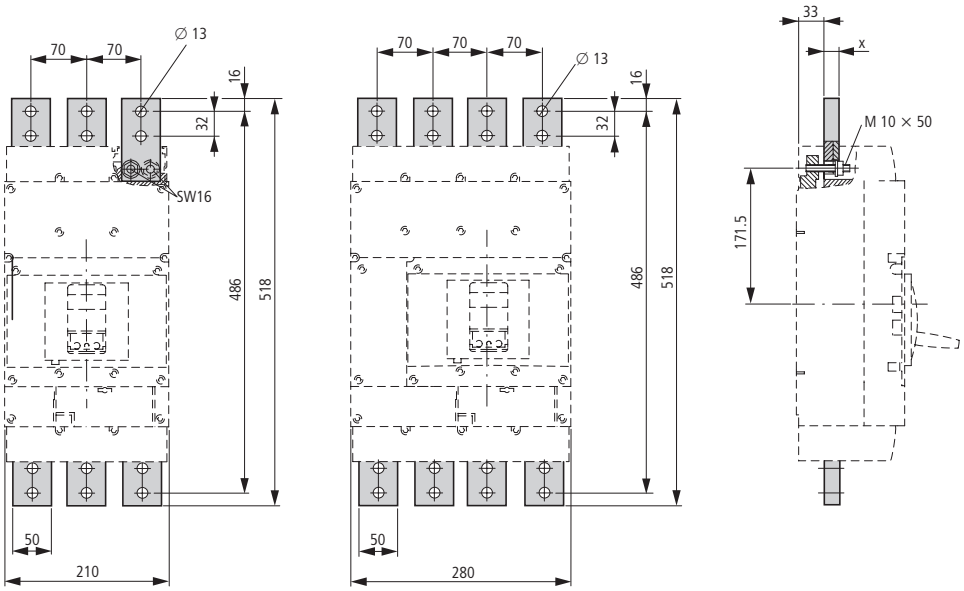

Part no.	x
NZM4(-4)-XKM2S-1250	12
NZM4(-4)-XKM2S-1600	20

Connection width extension

NZM4-XKV95

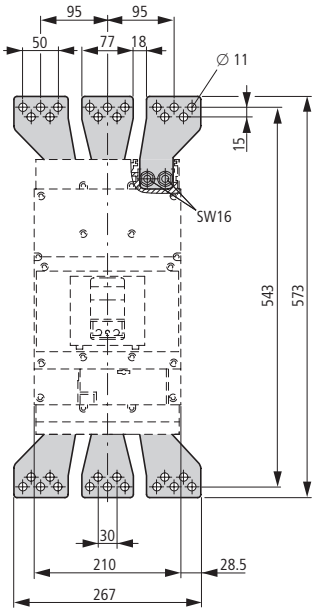

NZM4-XKV110

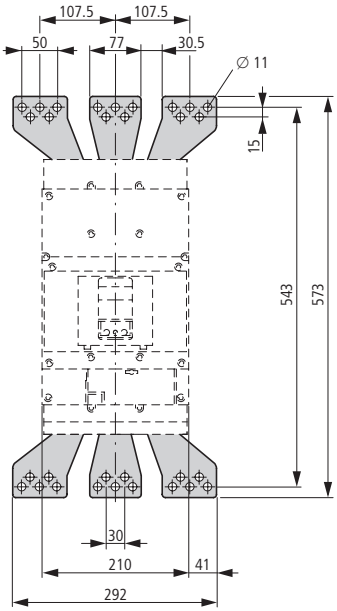

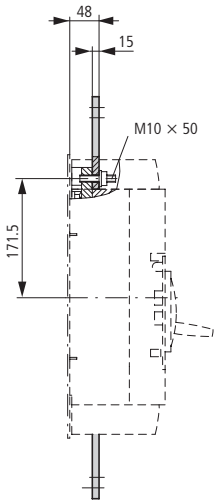

NZM4-4-XKV95

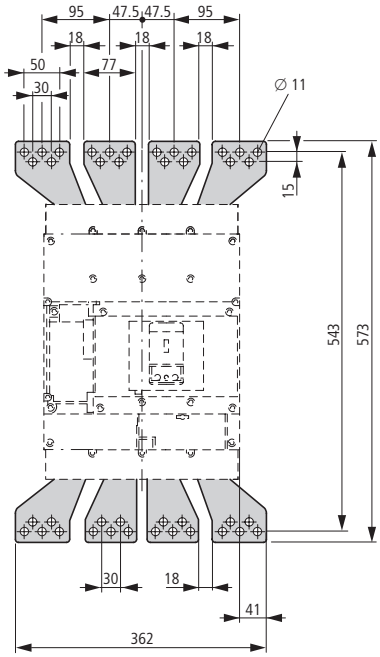

NZM4-4-XKV120

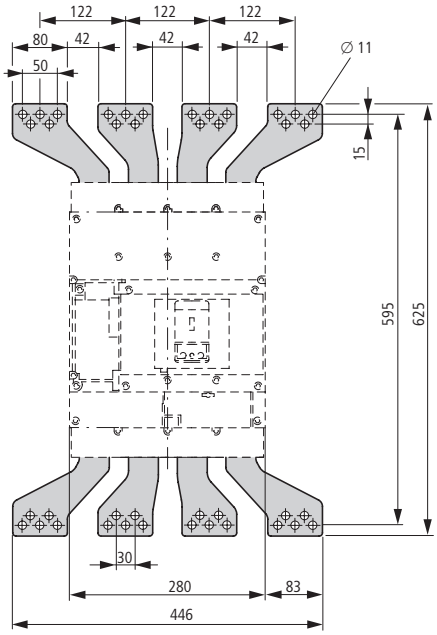

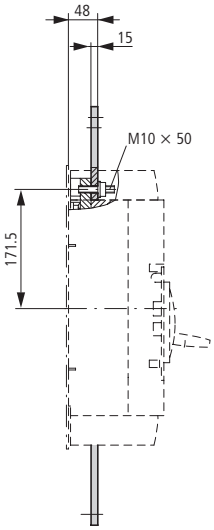

Connection on rear

NZM4(-4)-XKR

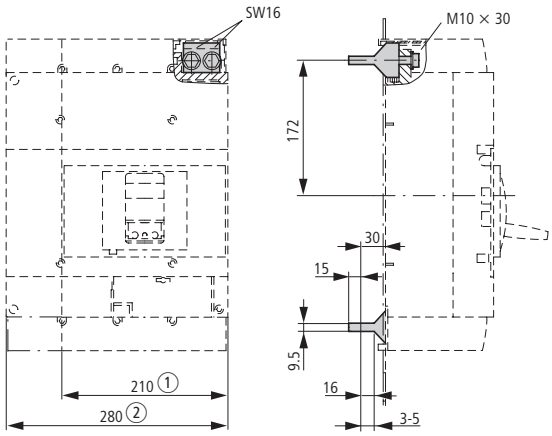

Fitting on mounting plate

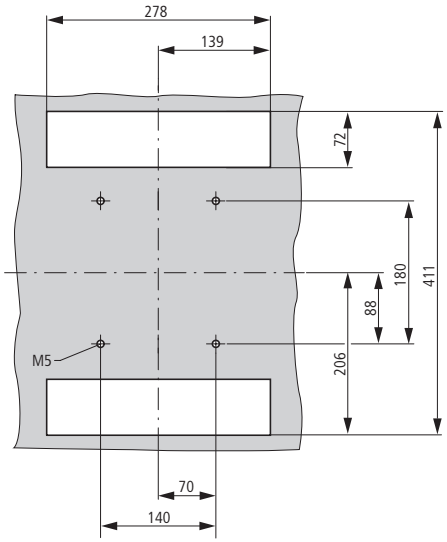

Rear connection possible also with rotation by 90°.
① 3 pole
② 4 pole

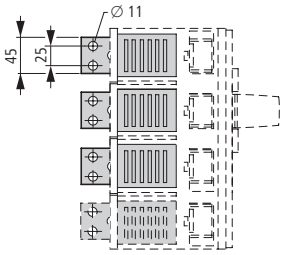

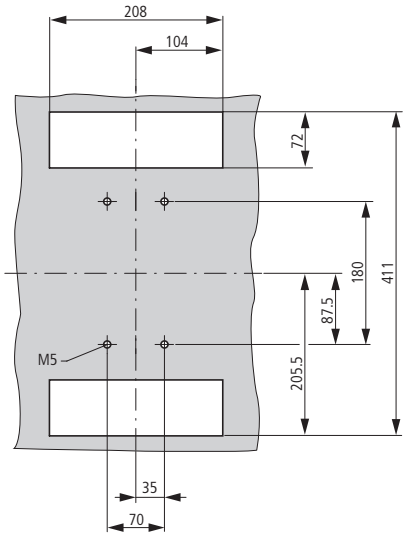

Phase isolators

NZM4-4-XKP

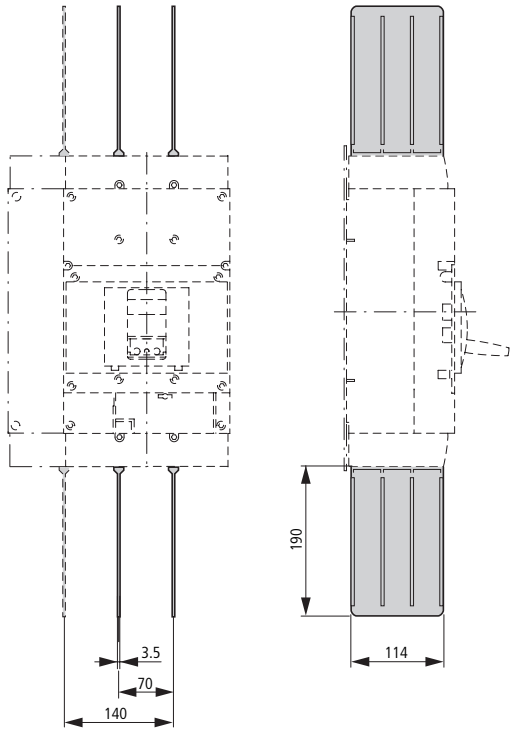

Set of adapters

NZM4-XAS14-1250

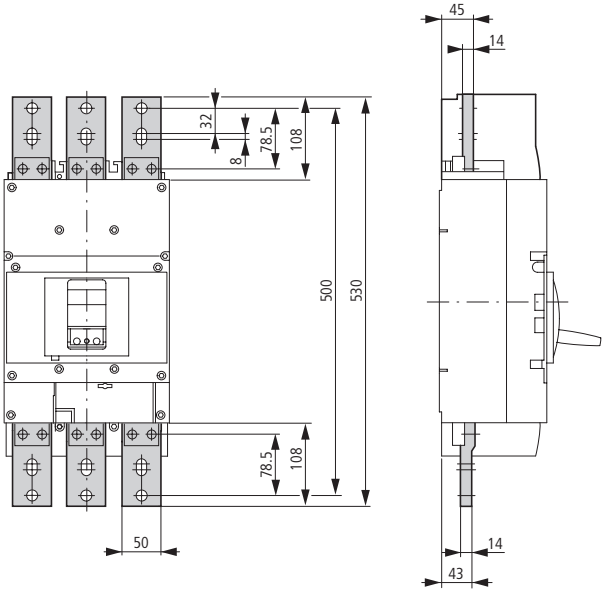

NZM4-XAS14-1600

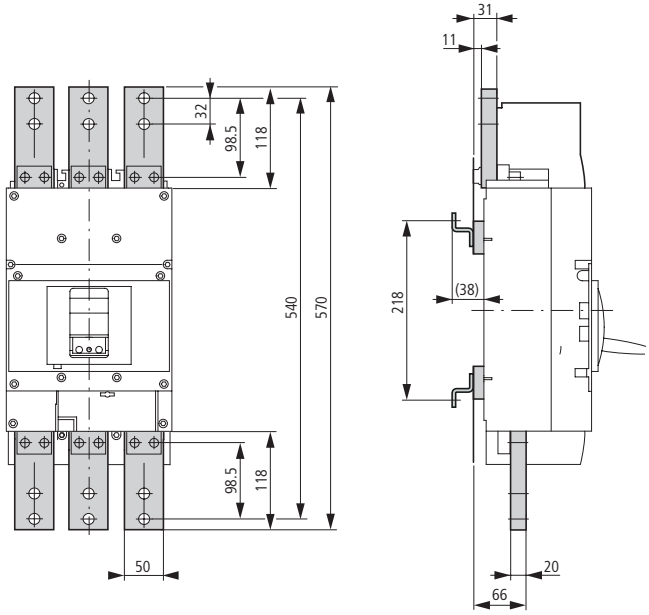

Drilling template NZM12-1000 (1250) change to NZM4

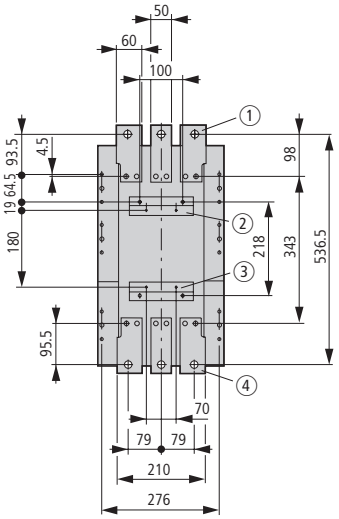

① Module plate NZM4-XAS12-1000(1250)
② Drillings for mounting bracket NZM4-XAS12(M5)
③ Mounting bracket NZM4-XAS12
④ Mounting rail NZM12

Replacement of NZM12-1000(1250) with NZM4 with module plate, fixed mounted on mounting plate

NZM4-XAS12-1000(1250)

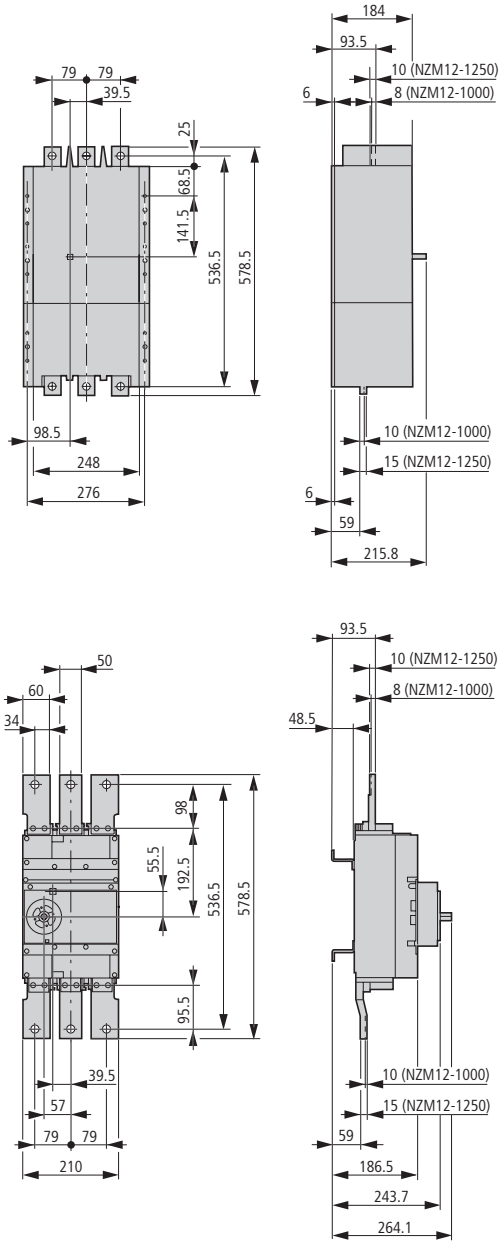

Replacement of NZM12-1600 with NZM4 with module plate, fixed mounted on mounting plate

NZM4-XAS12-1600

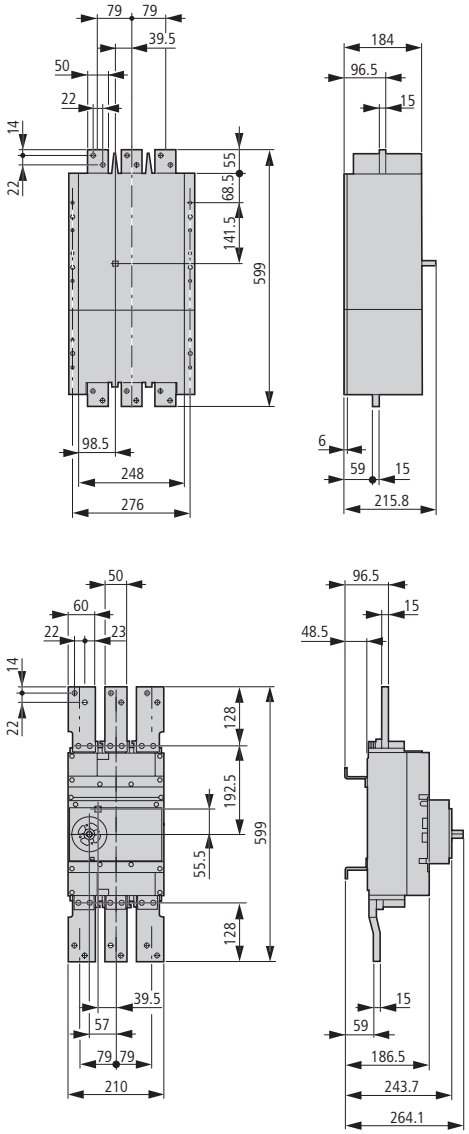

Replacement of N12-1000(1250) with N4 with module plate, fixed mounted on mounting plate

N4-XAS12-1000(1250)

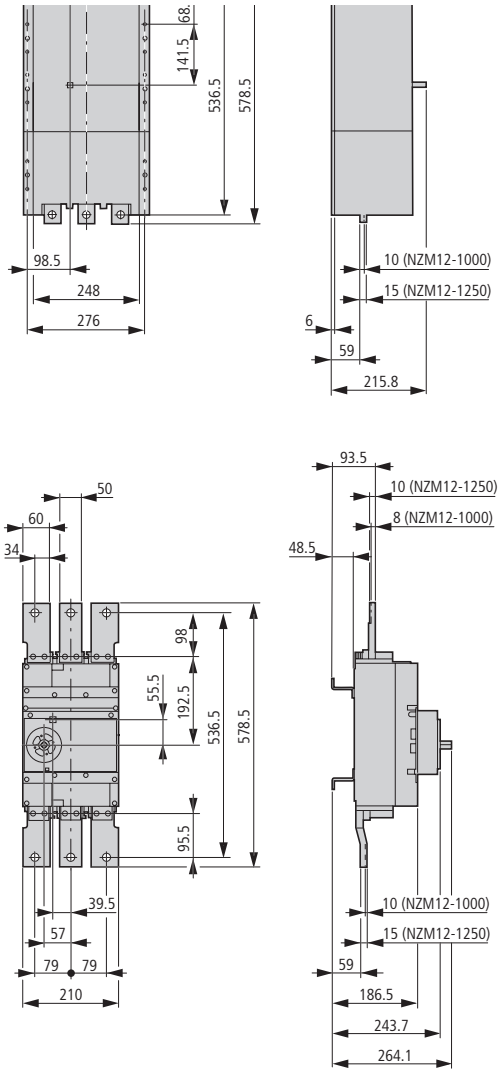

Replacement of N12-1600 with N4 with module plate, fixed mounted on mounting plate

N4-XAS12-1600

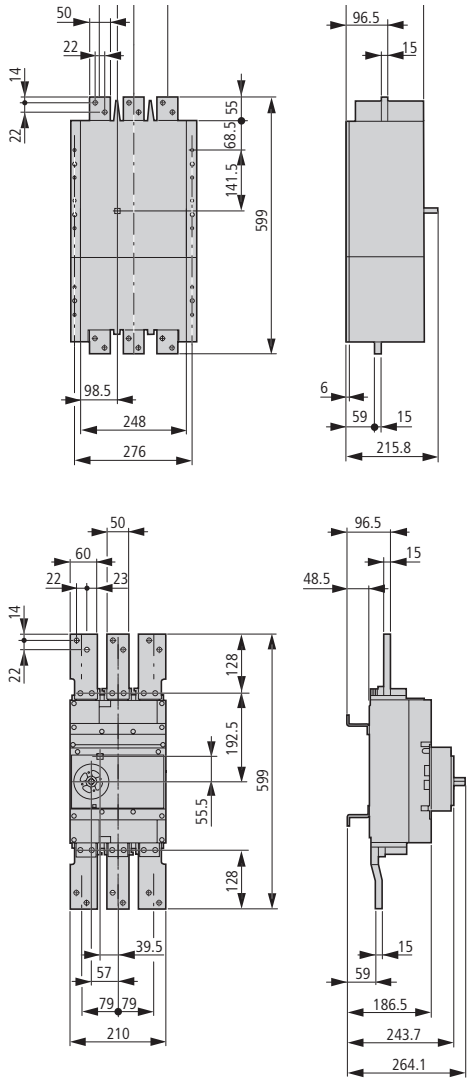

Rotary handle on circuit-breaker

NZM4-XDV(R)

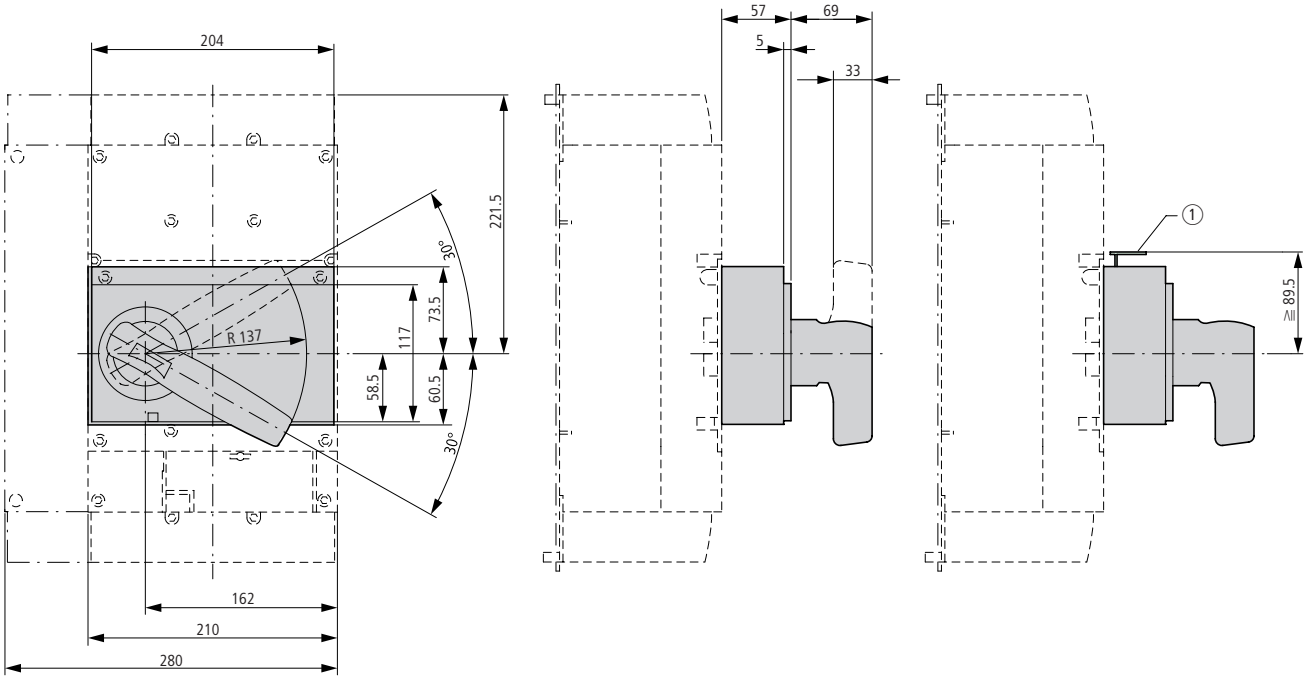

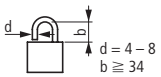

1 Up to 3 padlocks

Door coupling rotary handle

NZM4-XTVD(V)(R)...

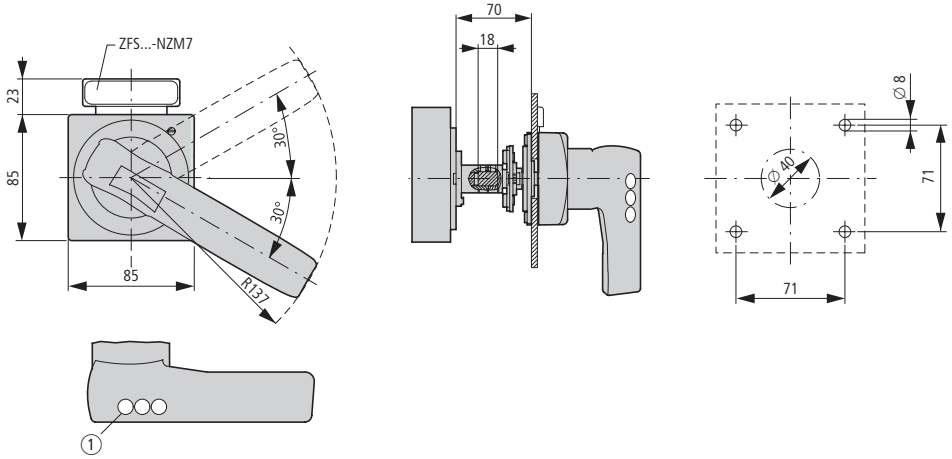

1 Up to 3 padlocks

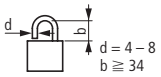

Door coupling rotary handle with extension shaft

NZM4-XTVD(V)(R)(-NA)
NZM3/4-XV4(6)

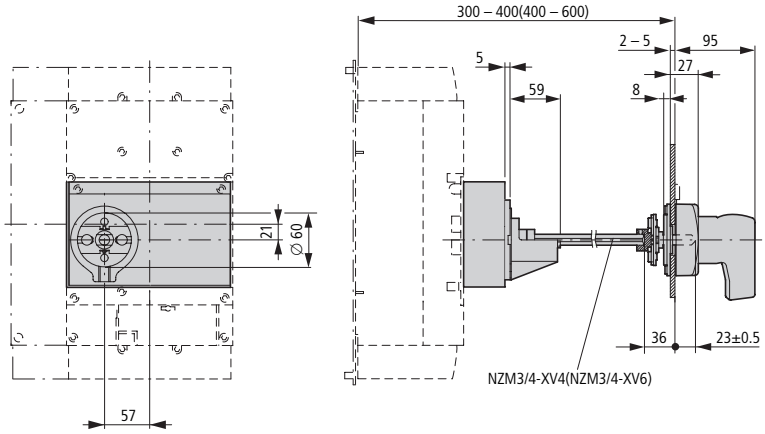

NZM4-XTVD(V)(R)-60(-NA)

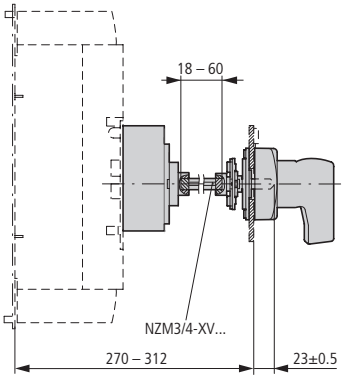

NZM4-XTVD(V)(R)-0(-NA)

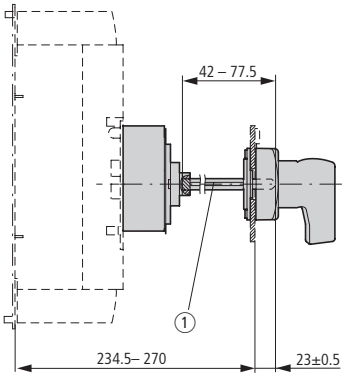

1 Special tip

Minimum door coupling rotary handle clearance from door pivot point

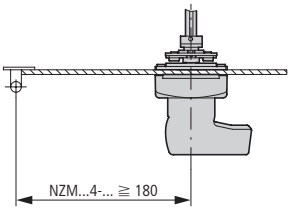

Main switch mounting kits for side-wall mounting

NZM4-XS(R)-L
NZM4-XS(R)-R

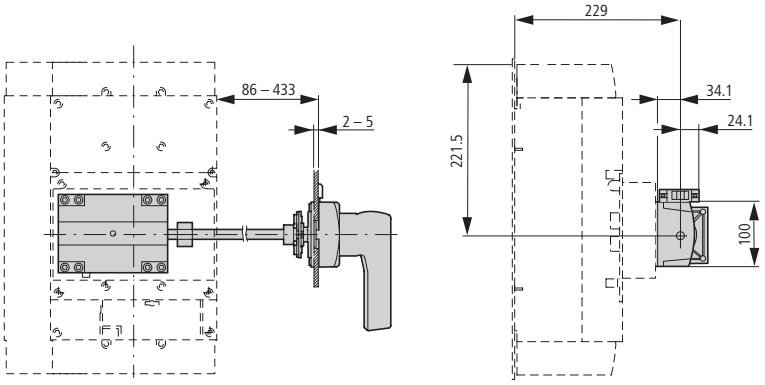

Insulating surrounds

NZM4-XBR

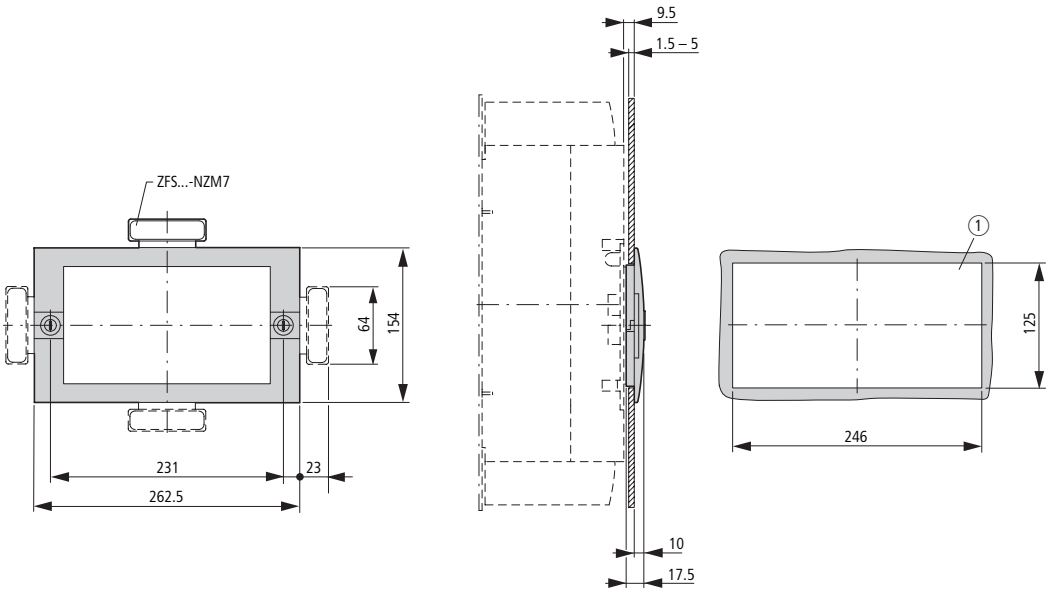

Mechanical interlock

NZM4-XMV + NZM4-XDV(R)

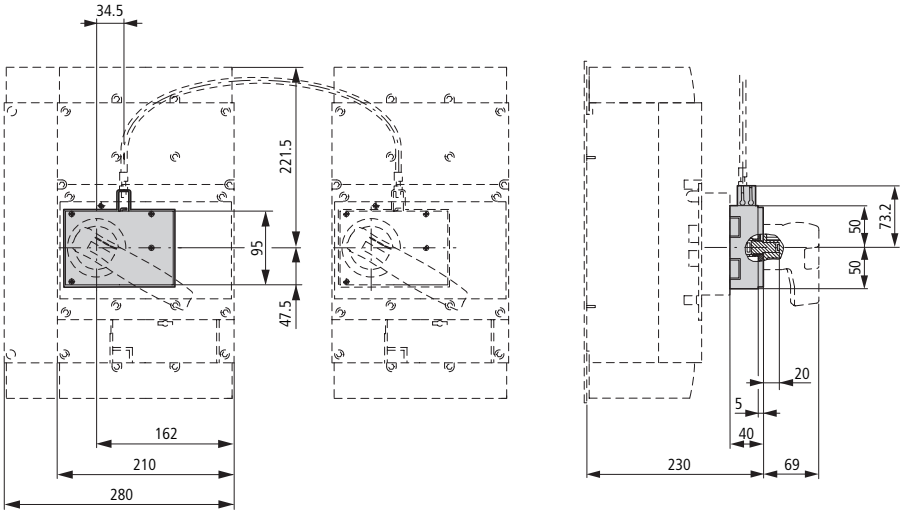

NZM4-XMV + NZM4-XTVD(V)(R)

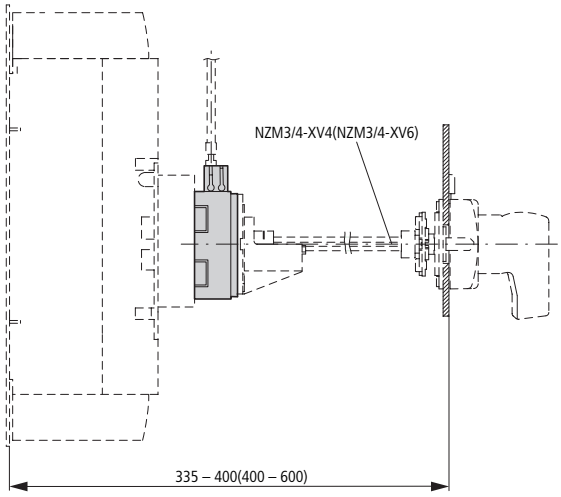

NZM4-XMV + NZM4-XTVD(V)(R)-60

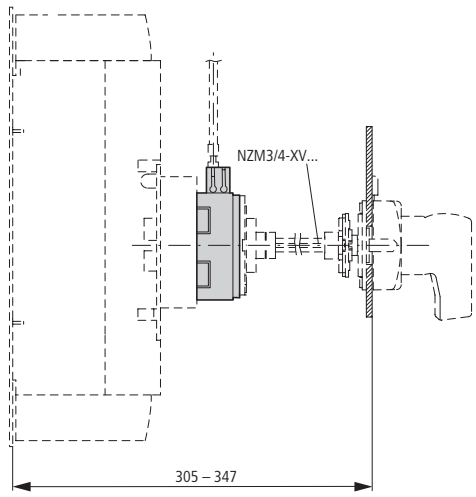

Mechanical interlock

NZM4-XMV + NZM4-XTVD(V)(R)-0

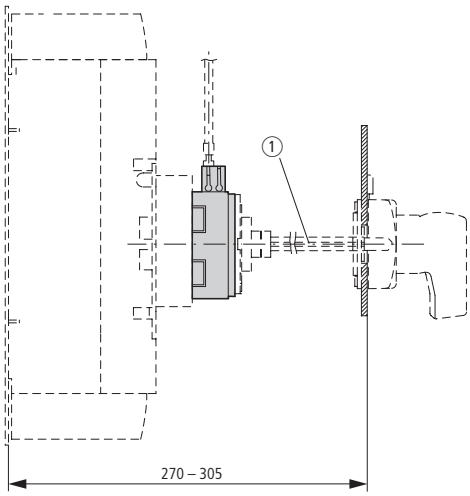

1 Special tip

Remote operator

NZM4-XR…

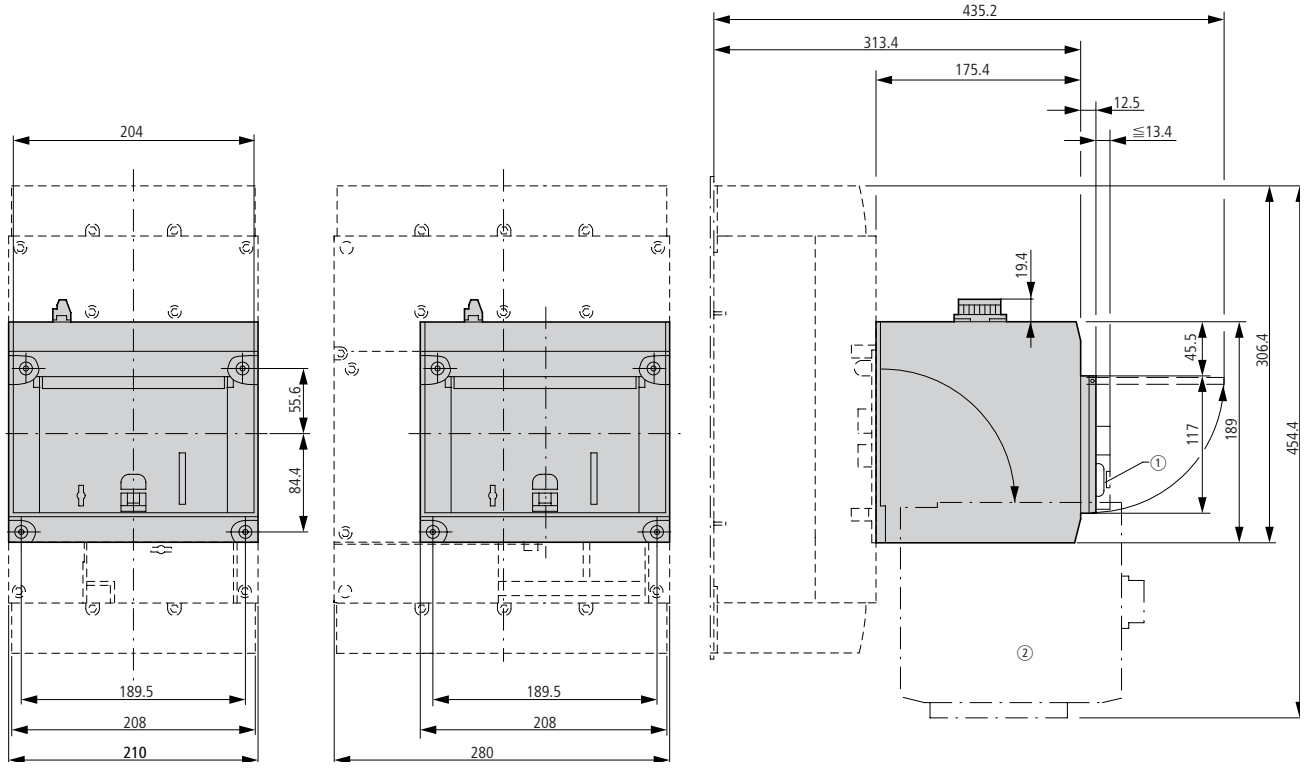

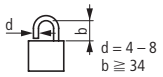

1 Up to 3 padlocks
Remote operator folded

Withdrawable unit

+NZM4-4-XAV

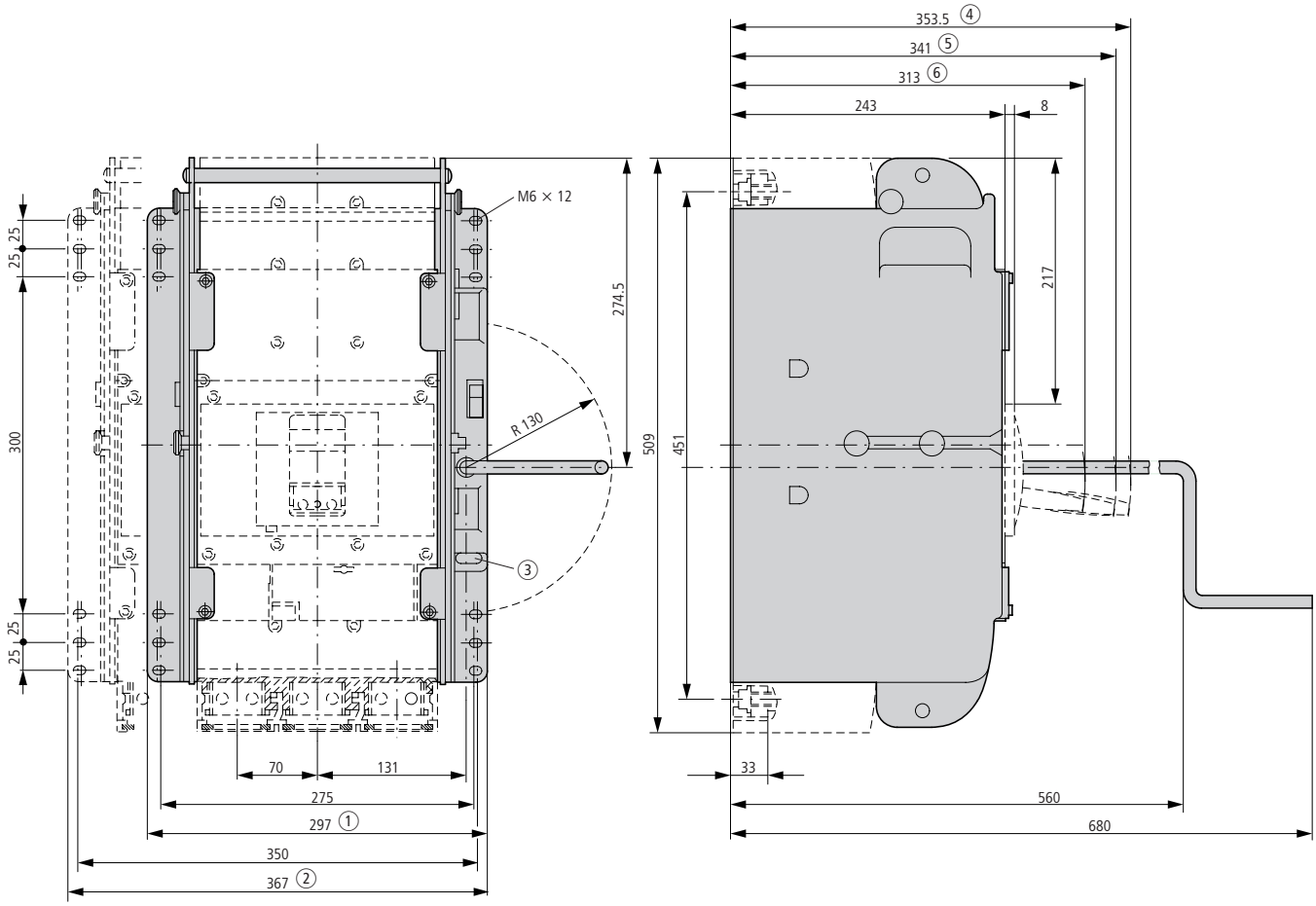

① 3-pole
② 4-pole

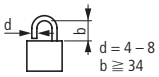

③ Up to 3 padlocks

④ Disconnected
⑤ Test
⑥ Connected